USE A SINGLE SHEET OF POLY TO ACT AS A BOND BREAKER BETWEEN MATCH CAST JOINTS. REMOVE POLY AS SOON AS PIECES ARE MOVED. (1)

DRILL AND ANCHOR ANCHOR RODS FOR TEMPORARY BEARINGS IN THE FIELD (1)

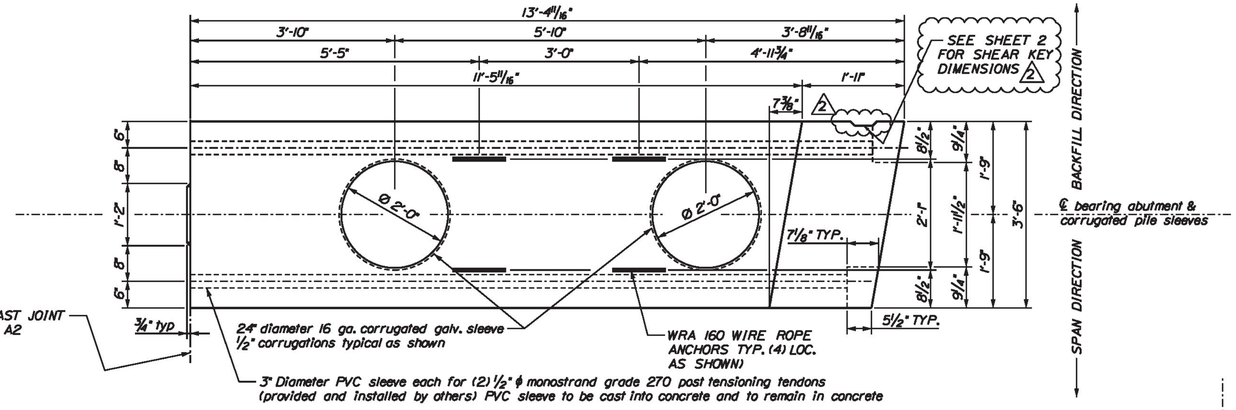

PLAN VIEW ABUTMENT SEGMENT B3

SCALE 3/4" = 1'-0"

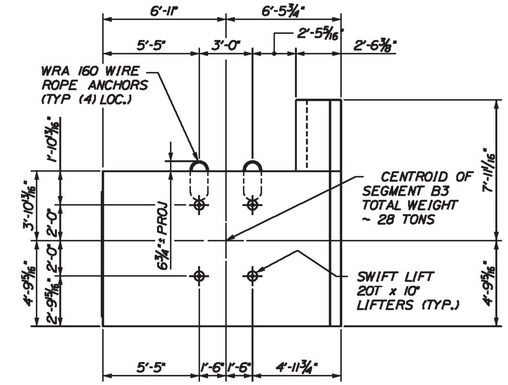

CENTROID AND LIFTER LOCATIONS

LOCATE SWIFT LIFT ANCHORS ON BACKFILL FACE

BACKFILL DIRECTION — SPAN DIRECTION

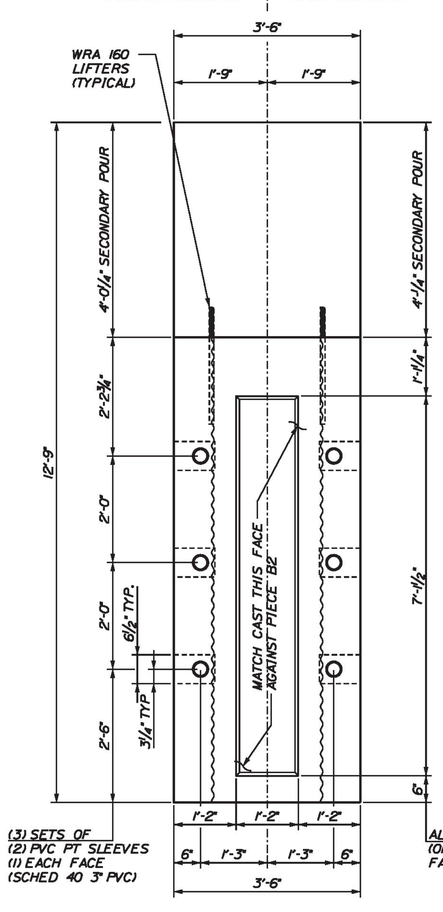

LEFT ELEVATION ABUTMENT SEGMENT B3

SCALE 3/4" = 1'-0"

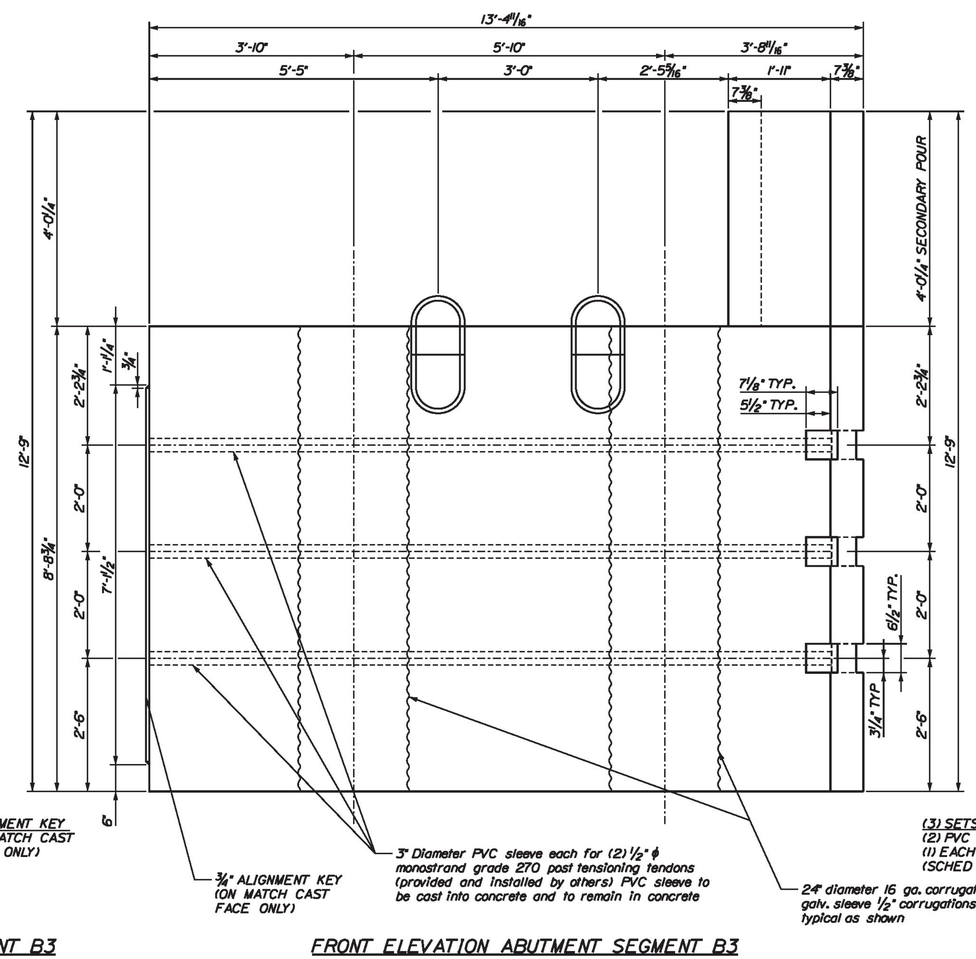

FRONT ELEVATION ABUTMENT SEGMENT B3

SCALE 3/4" = 1'-0" (LOOKING UPSTATION)

SPAN DIRECTION — BACKFILL DIRECTION

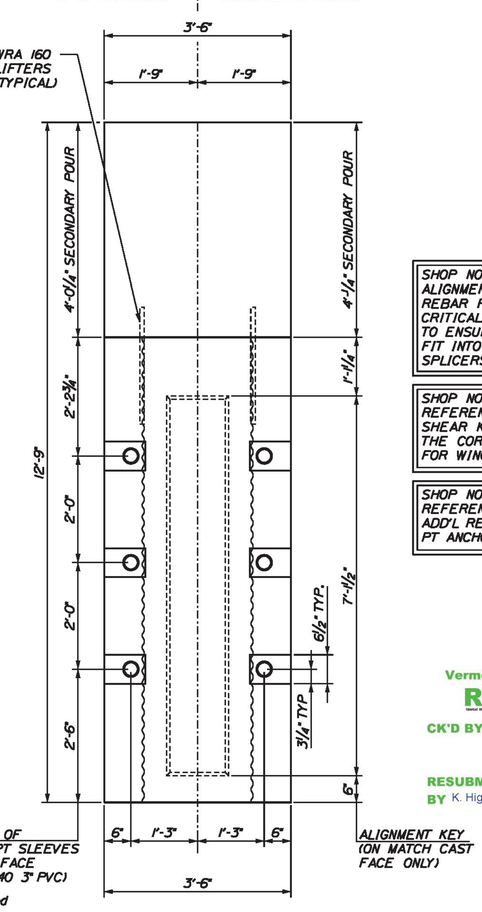

RIGHT ELEVATION ABUTMENT SEGMENT B3

SCALE 3/4" = 1'-0"

SHOP NOTE: ALIGNMENT OF PROJECTING REBAR FOR WINGWALL CRITICAL. USE A TEMPLATE TO ENSURE REBAR WILL FIT INTO GROUTED SPLICERS IN WING

SHOP NOTE: REFERENCE SHEET 2 FOR SHEAR KEY DETAILS AT THE CORNER CONNECTION FOR WING WALL WW4

SHOP NOTE: REFERENCE SHEET 2 FOR ADD'L REINFORCING AT PT ANCHORAGE

Vermont Agency of Transportation
RECEIVED
CK'D BY NVDB, JW, KM, TM OK'D BY JG
March 21, 2017
RESUBMIT No Approved
BY K. Higgins DATE 03/23/2017

CALDERWOOD ENGINEERING, ETC.
STRUCTURAL ENGINEERING • DETAILING SERVICES
222 RIVER RD, RICHMOND, ME 04357 PH/FX (207)737-2007 / 737-2008

PREPARED FOR: MILLER CONSTRUCTION

STRAFFORD BF 0177(10)

STATE OF VERMONT — ERIC F. CALDERWOOD — NO. 8747 Structural — LICENSED PROFESSIONAL ENGINEER

P.E. NUMBER

DATE

	BY	DATE
DESIGN-DETAILED	ETC	JAN 2017
CHECKED-REVIEWED		
REVISIONS 1		
REVISIONS 2	ADDRESS VTRANS COMMENTS	FEB 2017
REVISIONS 3	ADDRESS VTRANS COMMENTS	MAR 2017
REVISIONS 4		
FIELD CHANGES		

STRAFFORD VERMONT
ABUTMENT SHOP DETAILS

SEGMENT B3 GEOMETRIC DETAILS

SHEET NUMBER

8

CALDERWOOD ENGINEERING, ETC. — 222 RIVER ROAD — RICHMOND, ME 04357 — PH. (207)737-2007 FAX (207)737-2008