USE A SINGLE SHEET OF POLY TO ACT AS A BOND BREAKER BETWEEN MATCH CAST JOINTS. REMOVE POLY AS SOON AS PIECES ARE MOVED.

DRILL AND ANCHOR ANCHOR RODS FOR TEMPORARY BEARINGS IN THE FIELD

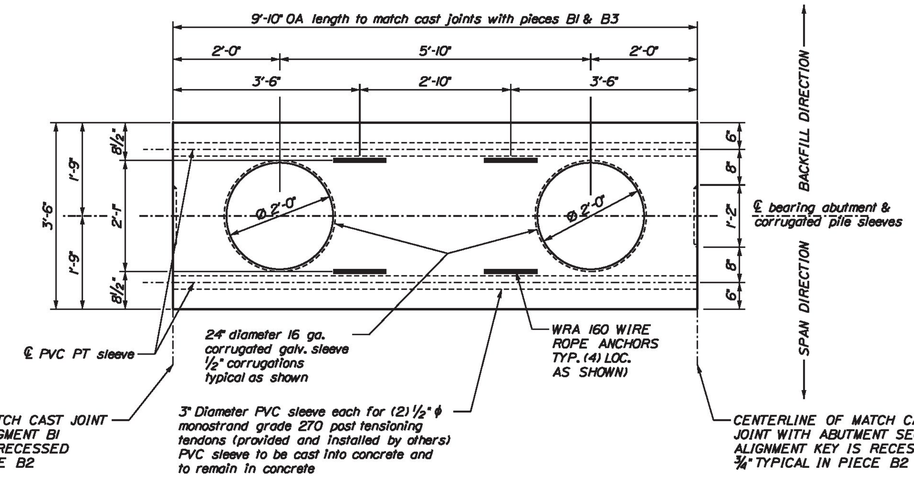

PLAN VIEW ABUTMENT SEGMENT B2

SCALE ¾" = 1'-0"

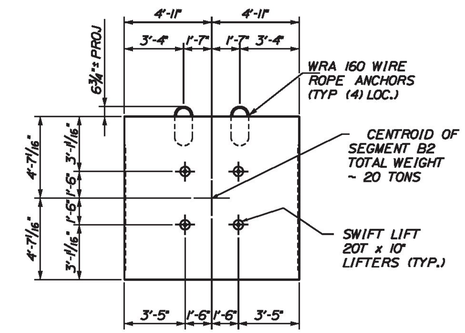

CENTROID AND LIFTER LOCATIONS

LOCATE SWIFT LIFT ANCHORS ON BACKFILL FACE

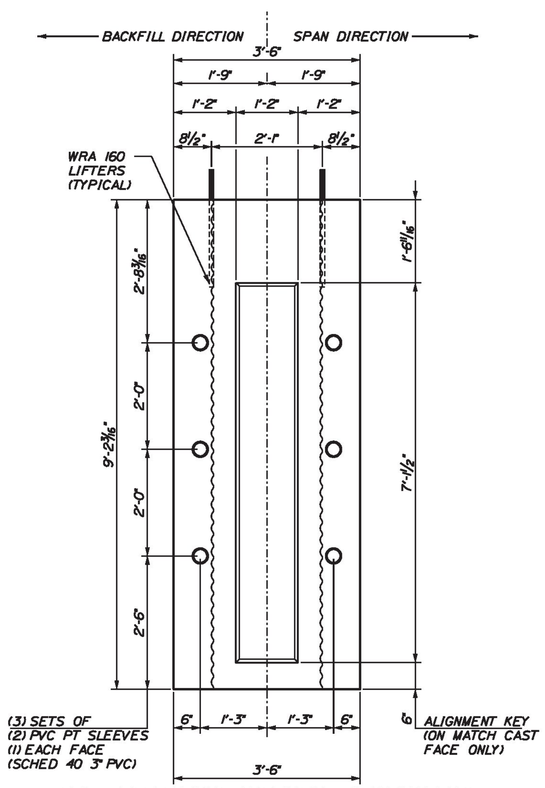

LEFT ELEVATION ABUTMENT SEGMENT B2

SCALE ¾" = 1'-0"

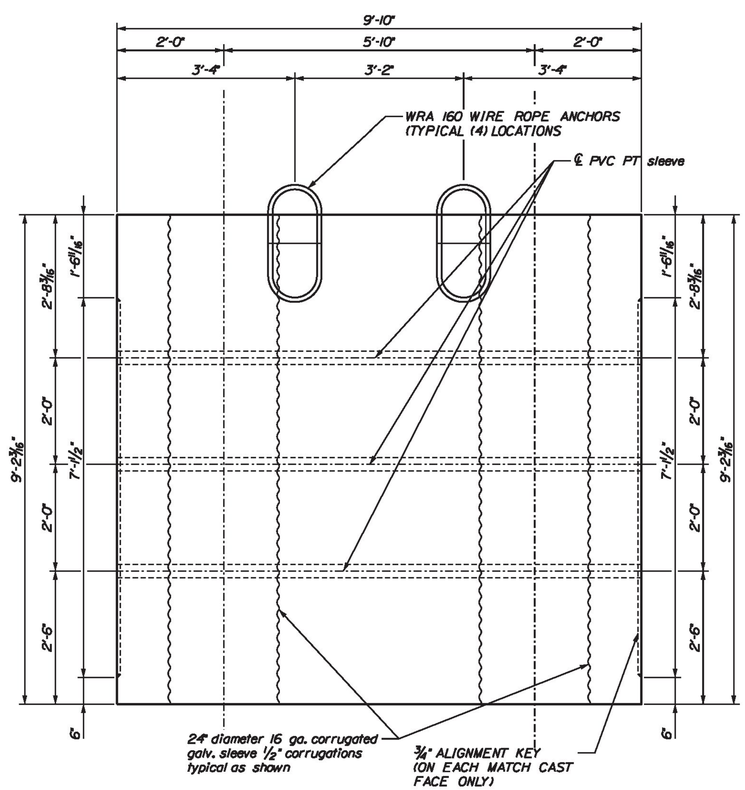

FRONT ELEVATION ABUTMENT SEGMENT B2

SCALE ¾" = 1'-0" (LOOKING UPSTATION)

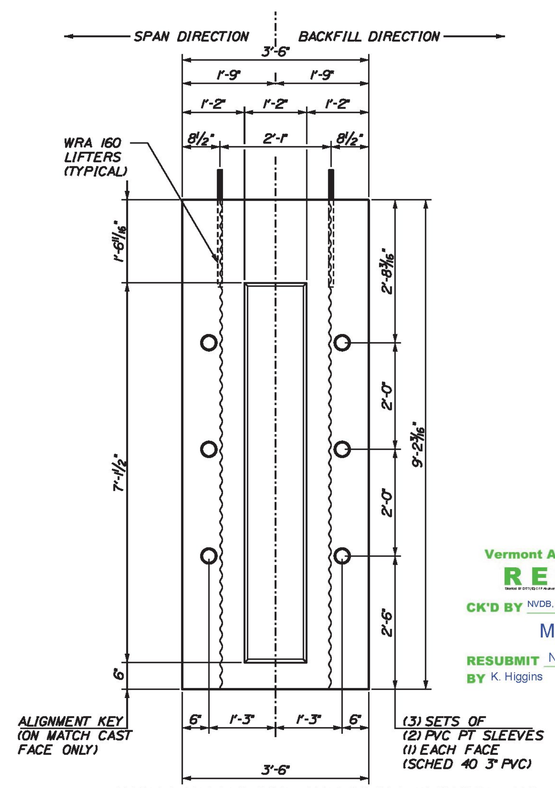

RIGHT ELEVATION ABUTMENT SEGMENT B2

SCALE ¾" = 1'-0"

Vermont Agency of Transportation
RECEIVED
Stamp # 0177(10) FY Acceptance 2016-2017 - Redacted
CK'D BY NVDB, JW, KM, TM OK'D BY JG
March 21, 2017
RESUBMIT No Approved
BY K. Higgins DATE 03/23/2017

CALDERWOOD ENGINEERING, ETC.
STRUCTURAL ENGINEERING • DETAILING SERVICES
222 RIVER RD, RICHMOND, ME 04357 PH/FX (207)737-2007 / 737-2008

PREPARED FOR:
MILLER CONSTRUCTION

STRAFFORD BF 0177(10)

STATE OF VERMONT ERIC T. CALDERWOOD No. 8747 Structural I LICENSED PROFESSIONAL ENGINEER

P.E. NUMBER

DATE

	BY	DATE
DESIGN-DETAILED	ETC	JAN 2017
CHECKED-REVIEWED		
REVISIONS 1	ADDRESS VTRANS COMMENTS	FEB 2017
REVISIONS 2		
REVISIONS 3		
REVISIONS 4		
FIELD CHANGES		

STRAFFORD VERMONT
ABUTMENT SHOP DETAILS

SEGMENT B2 GEOMETRIC DETAILS

SHEET NUMBER

7

CALDERWOOD ENGINEERING, ETC. 222 River Road RICHMOND, ME 04357 PH. (207) 737-2007 FAX (207) 737-2008