USE A SINGLE SHEET OF POLY TO ACT AS A BOND BREAKER BETWEEN MATCH CAST JOINTS. REMOVE POLY AS SOON AS PIECES ARE MOVED.

DRILL AND ANCHOR ANCHOR RODS FOR TEMPORARY BEARINGS IN THE FIELD

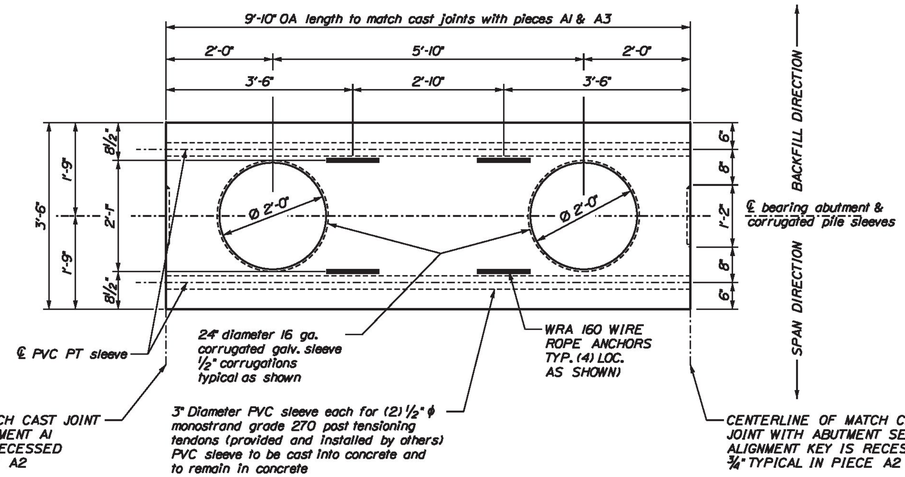


## PLAN VIEW ABUTMENT SEGMENT A2

SCALE ¾" = 1'-0"

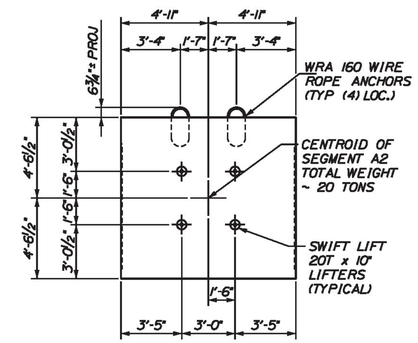


## CENTROID AND LIFTER LOCATIONS

LOCATE SWIFT LIFT ANCHORS ON BACKFILL FACE

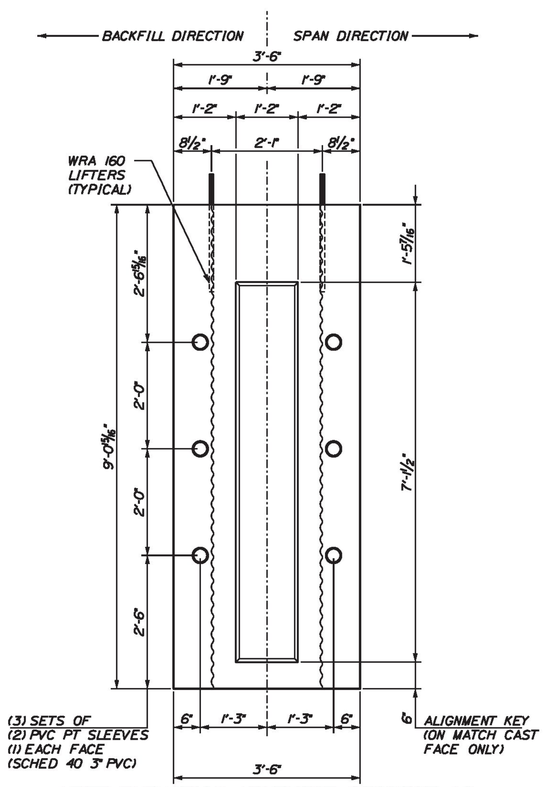


## LEFT ELEVATION ABUTMENT SEGMENT A2

SCALE ¾" = 1'-0"

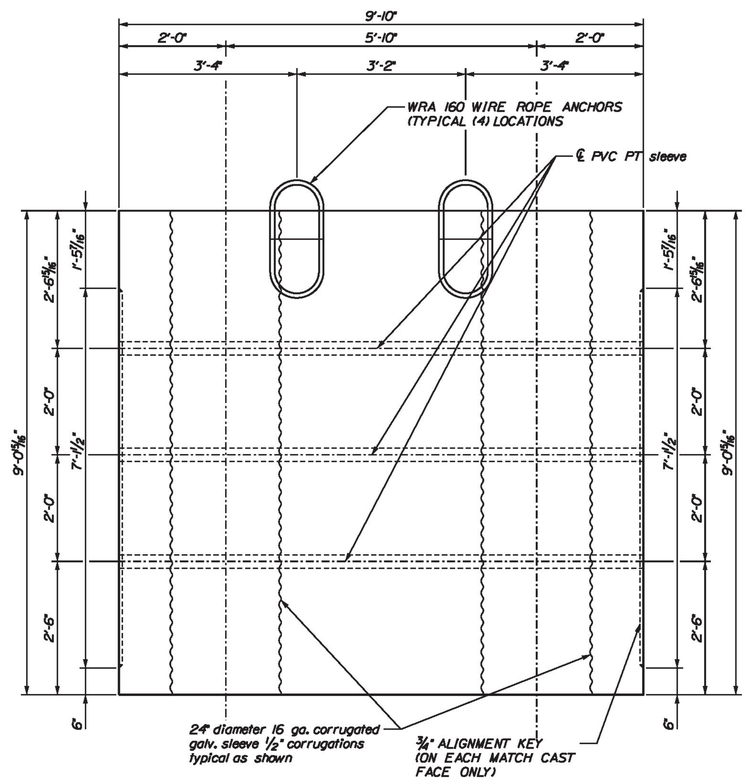


## FRONT ELEVATION ABUTMENT SEGMENT A2

SCALE ¾" = 1'-0" (LOOKING BACKSTATION)

ADJUST REBAR IN ORDER TO CLEAR LIFTERS (TYPICAL AS REQUIRED)

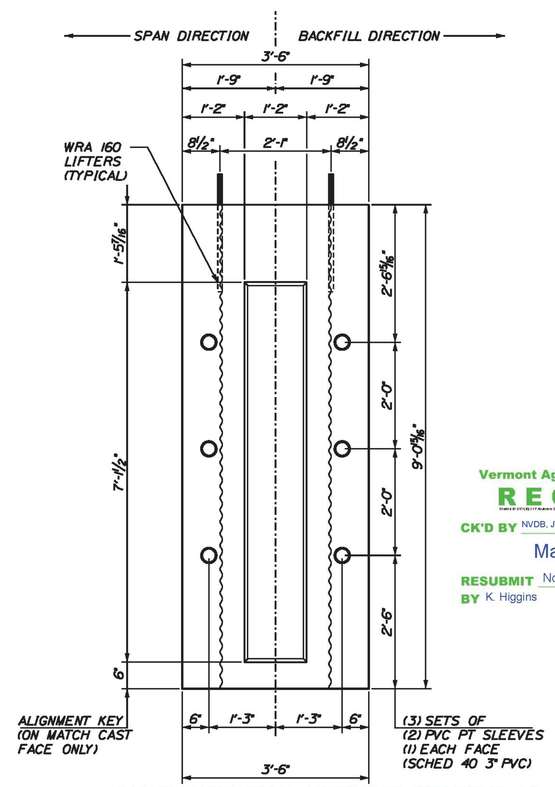


## RIGHT ELEVATION ABUTMENT SEGMENT A2

SCALE ¾" = 1'-0"

Vermont Agency of Transportation
RECEIVED
CK'D BY NVDB, JW, KM, TM OK'D BY JG
March 21, 2017
RESUBMIT No Approved
BY K. Higgins DATE 03/23/2017

CALDERWOOD ENGINEERING, ETC.
STRUCTURAL ENGINEERING • DETAILING SERVICES
222 RIVER RD, RICHMOND, ME 04357 PH/FX (207)737-2007 / 737-2008
PREPARED FOR:
MILLER CONSTRUCTION
STRAFFORD BF 0177(10)

STATE OF VERMONT ERIC T. CALDERWOOD NO. 8270 LICENSED PROFESSIONAL ENGINEER

P.E. NUMBER
DATE

| | BY | DATE |
|---|---|---|
| DESIGN-DETAILED | ETC | JAN 2017 |
| CHECKED-REVIEWED | | |
| REVISIONS 1 | ADDRESS VTRANS COMMENTS | FEB 2017 |
| REVISIONS 2 | | |
| REVISIONS 3 | | |
| REVISIONS 4 | | |
| FIELD CHANGES | | |

STRAFFORD VERMONT
ABUTMENT SHOP DETAILS

SEGMENT A2 GEOMETRIC DETAILS

SHEET NUMBER
4

CALDERWOOD ENGINEERING, ETC.
222 RIVER RD.
RICHMOND, ME 04357
PH. (207) 737-2007 FAX (207) 737-2008