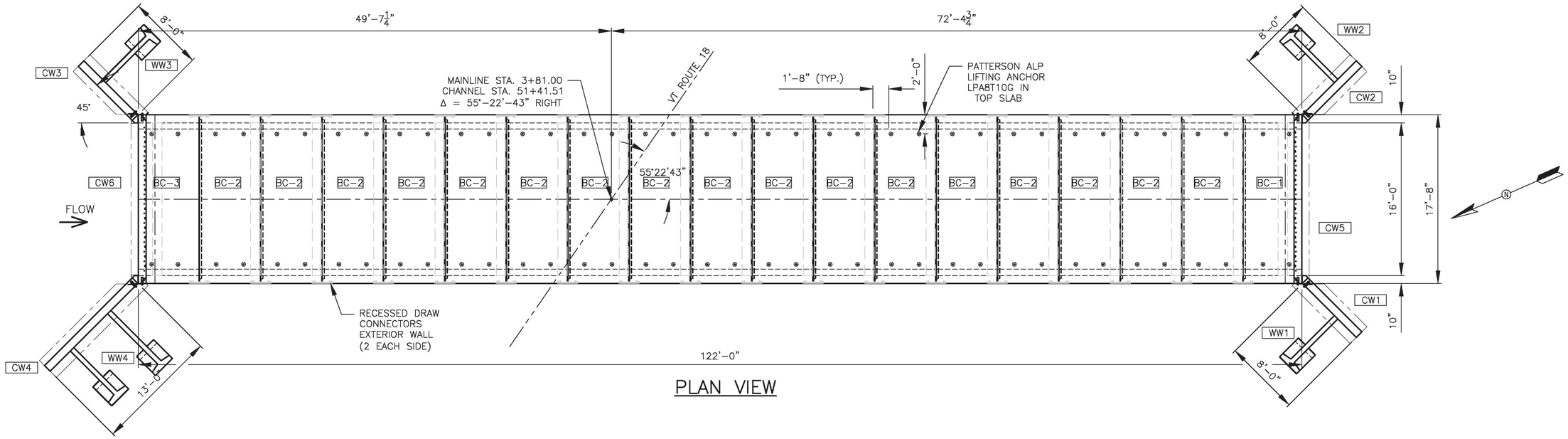

PLAN VIEW

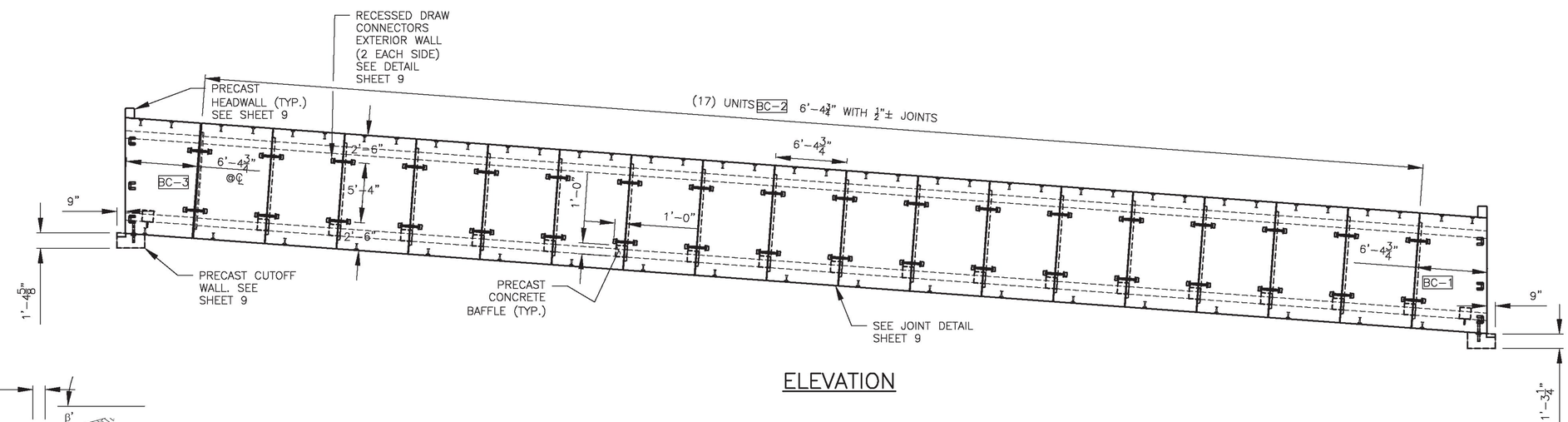

ELEVATION

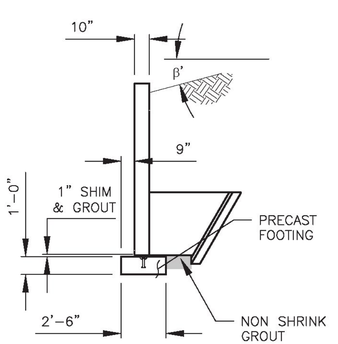

WINGWALL ELEVATION VIEW

STATE OF VERMONT
DARYL D. BURNS
No. 9031
Structural I
LICENSED
PROFESSIONAL ENGINEER

5/8/18

REV.NO.	DATE	REVISION

PREPARED BY:

DELTA
SPECIALTY PRECAST CONCRETE ENGINEERS
860 HOOPER ROAD, ENDWELL, NY 13760
TEL: (607) 231-6600 FAX: (607) 231-6650

PREPARED FOR:

CAMP PRECAST
CONCRETE PRODUCTS
78 PRECAST RD
MILTON, VT 05468
PHONE: (802)893-2401
FAX: (802)893-1542

DATE: 3/29/18	SHEET TITLE: PLAN AND ELEVATION	DRWN BY: BJC
SCALE: N.T.S.		CKD BY: RJA
PROJECT: WATERFORD, VT 16' x 8' BOX CULVERT BF 0225(5) VT RT. 18 BRIDGE #2		
CONTRACTOR: ...		DWG. I.D. PD-01
DELTA PROJ. NO.: 2018.477.003		SHT. NO. 2 OF 13