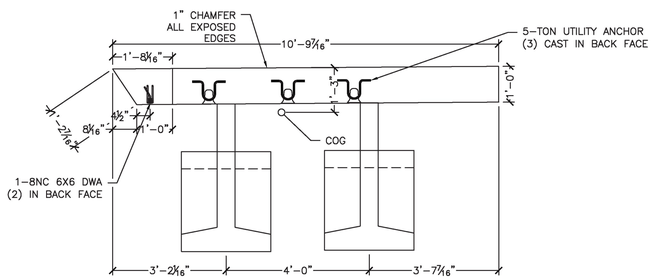

1 S7.0 WW3 PLAN VIEW
½" = 1'-0"

WW3 - (1) REQ'D

ITEM #275602
UNIT AND VOLUME:
PANEL – 2.15CY
B ANCHOR – 0.41CY/EA
TOTAL WT – 12,190#

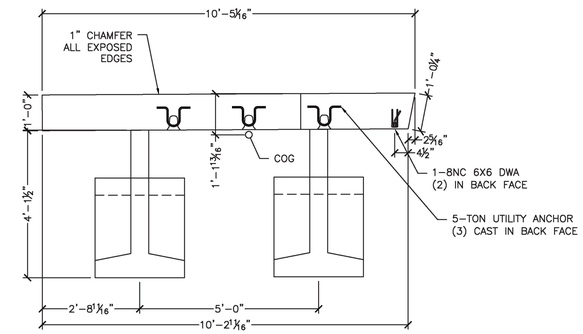

3 S7.0 WW4 PLAN VIEW
½" = 1'-0"

WW4 - (1) REQ'D

ITEM #275602
UNIT AND VOLUME:
PANEL – 2.58CY
B ANCHOR – 0.41CY/EA
TOTAL WT – 13,940#

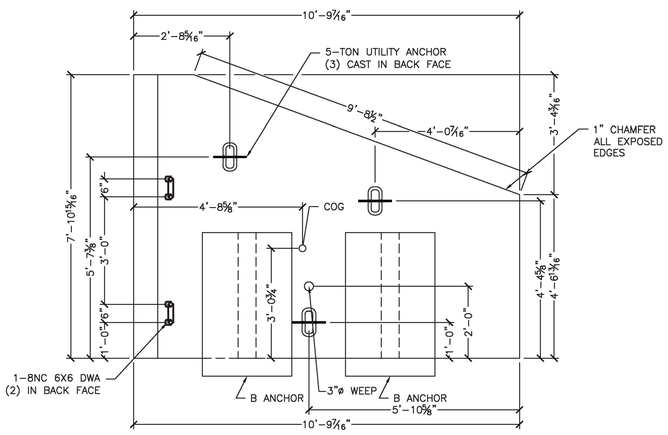

2 S7.0 WW3 ELEVATION VIEW
½" = 1'-0"

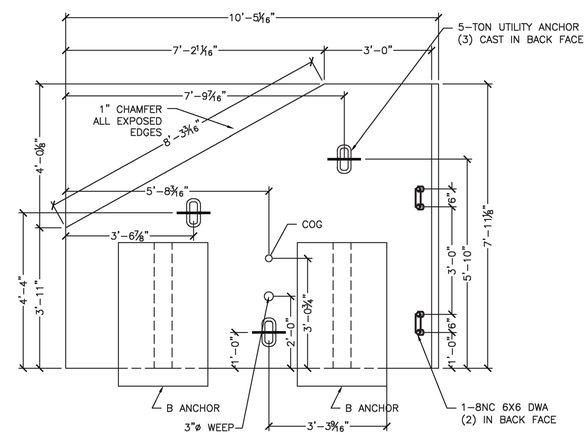

4 S7.0 WW4 ELEVATION VIEW
½" = 1'-0"

SPECIALTY ENGINEERING SERVICES PROVIDED BY:
CONCRETE ENGINEERING SOLUTIONS, LLC
ALL REPORTS MUST BE SIGNED AND SEALED BY A LICENSED PROFESSIONAL ENGINEER
SECTION 1001 OF THE VT STATE STANDARDS FOR RESIDUAL DESIGN PRACTICE
PO BOX 1 ESSEX JCT, VT 05453
PHONE: 802-878-0880
FAX: 802-878-0881

No.	Date	Revision	By
1	04/18/2017	REV. PER COMMENTS	SDG

STATE OF VERMONT
STUART D. GORHAM
NO 84443
CIVIL
LICENSED
PROFESSIONAL ENGINEER
4/18/17

WHITE MOUNTAIN PRECAST, LLC
173 BUXTON INDUSTRIAL DRIVE-PO BOX 870
HOOKSETT, NH 03106-0870
PHONE: 603-428-3218
FAX: 603-428-7428

US Route 2, Rural Major Collector, Bridge 32
Town of Richmond, Project BF 0284(28)

25'-0" x 5'-3" Rigid Frame Bridge
WWC and WWD Details

Project No. 70844
Date: 2/9/17
Designed by: SDG
Drawn by: SDG
Checked by: CFP
Scale: AS SHOWN

Prepared for:
G.W.Tatro Construction
PO Box 339
5195 VT Rt 15
Jeffersonville, VT 05464

DWG NO.
S7.0

G:\WORK\38-WRCHE\17-28.01 GW TATRO CONST RICHMOND VT\BFB 25X8 7885-170414.DWG 4/18/2017 3:41 PM