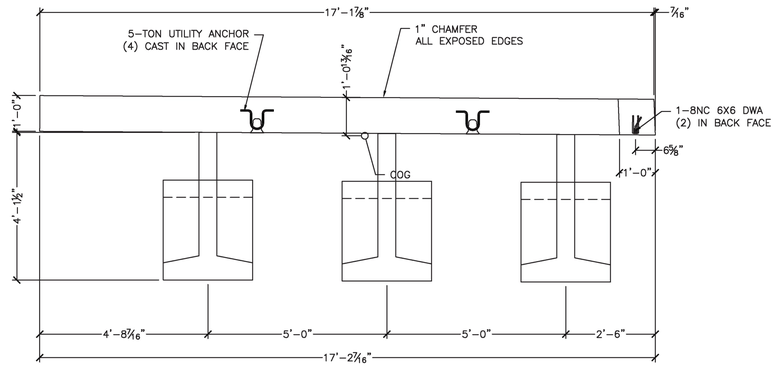

1 S6.0 WW1 PLAN VIEW
½" = 1'-0"

WW1 - (1) REQ'D
ITEM #275602
UNIT AND VOLUME:
PANEL – 4.64CY
B ANCHOR – 0.41CY/EA
TOTAL WT – 24,000#

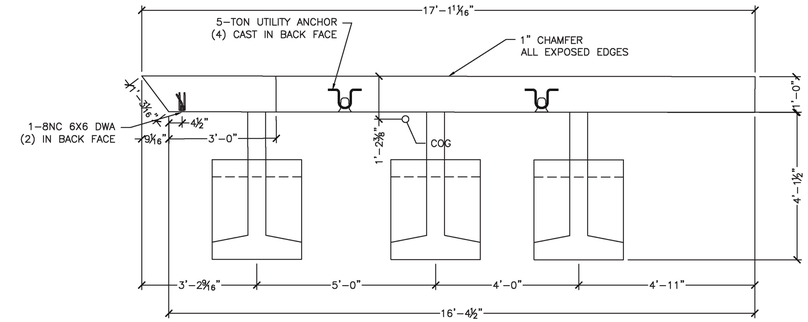

3 S6.0 WW2 PLAN VIEW
½" = 1'-0"

WW2 - (1) REQ'D
ITEM #275602
UNIT AND VOLUME:
PANEL – 3.52CY
B ANCHOR – 0.41CY/EA
TOTAL WT – 19,490#

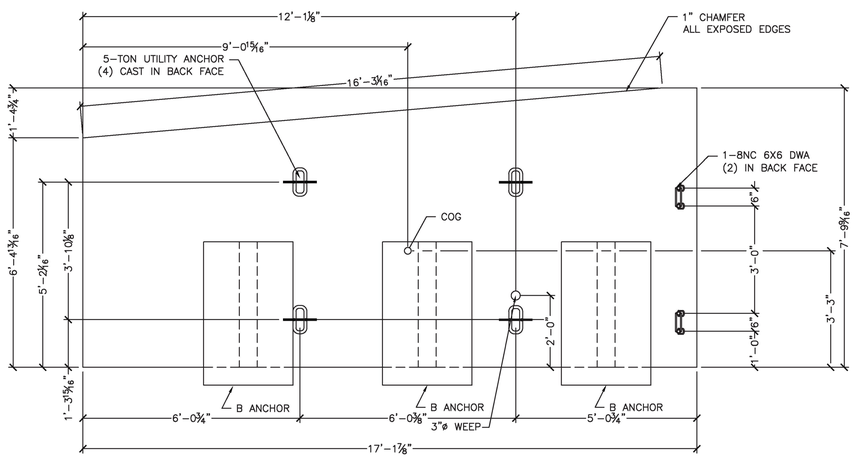

2 S6.0 WW1 ELEVATION VIEW
½" = 1'-0"

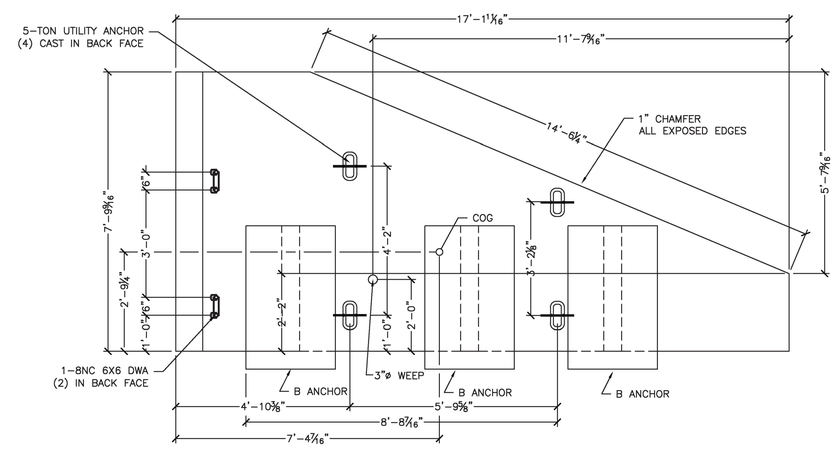

4 S6.0 WW2 ELEVATION VIEW
½" = 1'-0"

SPECIALTY ENGINEERING SERVICES PROVIDED BY:
CONCRETE ENGINEERING SOLUTIONS, LLC
PRECAST/PRESTRESSED CONCRETE
BRIDGE
AT ENTERPRISE DRIVE FOR
MOTION TO PLACE
FILE: 70N84.DWG

No.	Date	Revision	By
1	04/18/2017	REV. PER COMMENTS	SDG

STATE OF VERMONT
STUART D. GORHAM
NO 84443
CIVIL
LICENSED
PROFESSIONAL ENGINEER
4/18/17

WHITE MOUNTAIN PRECAST, LLC
173 BUXTON INDUSTRIAL DRIVE-PO BOX 870
CONWAY, NH 03818-0870
PHONE: 603-428-3218
FAX: 603-428-7428

US Route 2, Rural Major Collector, Bridge 32
Town of Richmond, Project BF 0284(28)

25'-0" x 5'-3" Rigid Frame Bridge
WW1 & WW2

Scale: AS SHOWN
Checked By: CFP
Drawn by: SDG
Designed by: SDG
Date: 2/9/17
Project No. 70N4

Prepared for:
G.W.Tatro Construction
PO Box 339
5195 VT Rt 15
Jeffersonville, VT 05464

DWG NO.
S6.0

G:\WORK\38-ARCHIE\17-38.01 GW TATRO CONST RICHMOND VT\RB 25X8 7885-17D414.DWG 4/18/2017 3:41 PM