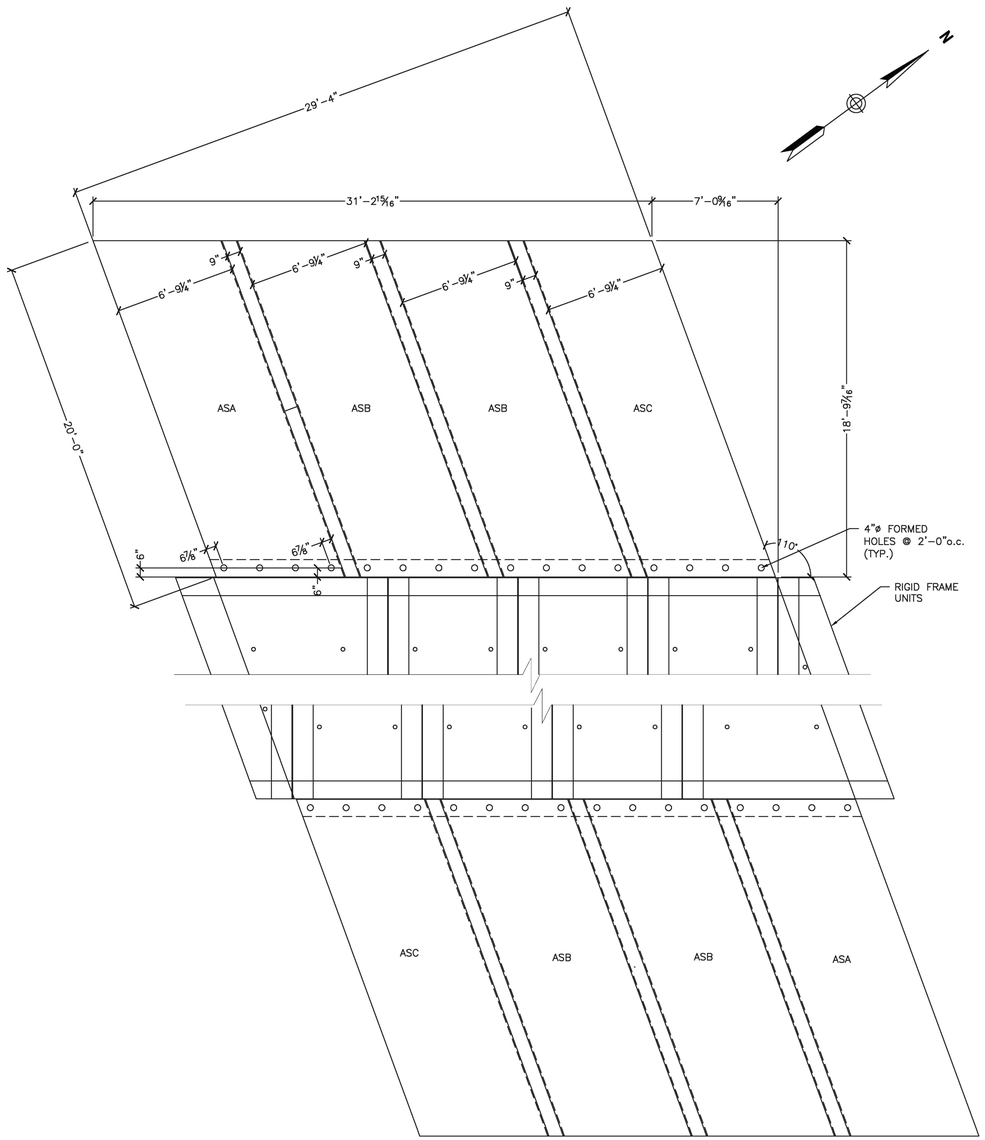

1 S3.4 APPROACH SLAB PLAN VIEW
1/4" = 1'-0"

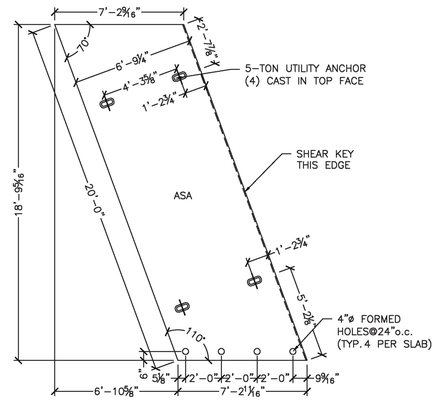

2 S3.4 ASA PLAN VIEW
1/4" = 1'-0"

ASA - (2) REQ'D
ITEM #380000
UNIT AND VOLUME:
VOL. 6.27CY
WT - 25,405#

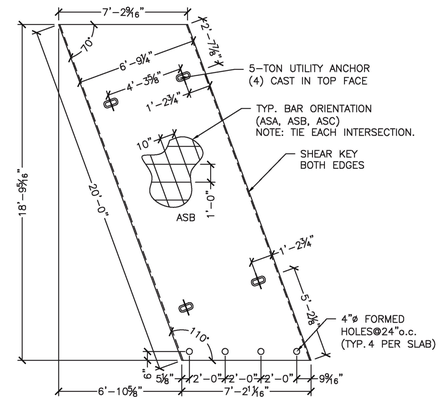

3 S3.4 ASB PLAN VIEW
1/4" = 1'-0"

ASB - (4) REQ'D
ITEM #380000
UNIT AND VOLUME:
VOL. 6.27CY
WT - 25,405#

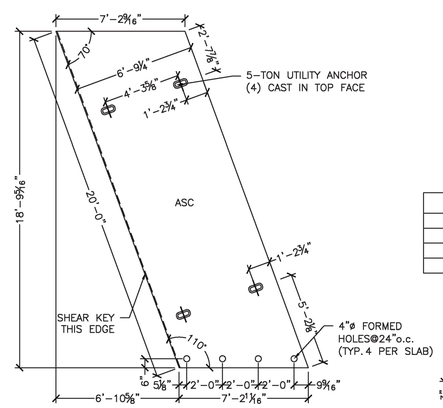

4 S3.4 ASC PLAN VIEW
1/4" = 1'-0"

ASC - (2) REQ'D
ITEM #380000
UNIT AND VOLUME:
VOL. 6.27CY
WT - 25,405#

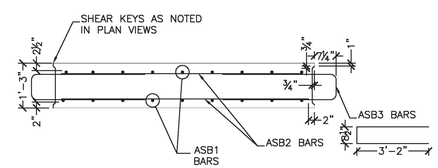

ASA, ASB, ASC REINFORCING					
MARK	QTY	SIZE	SPACING	TYPE	CUT LENGTH
ASB1	18	#9	10"	STR	19'-8"
ASB2	38	#5	12"	STR	6'-9"
ASB3	38	#5	12"	'U'	6'-9 1/2"

5 S3.4 ASB SECTION VIEW
1/2" = 1'-0"

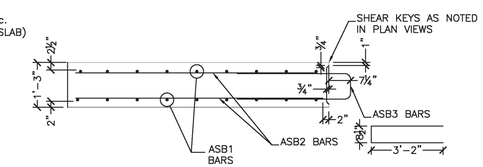

ASA & ASC REINFORCING					
MARK	QTY	SIZE	SPACING	TYPE	CUT LENGTH
ASB1	18	#9	10"	STR	19'-8"
ASB2	38	#5	12"	STR	6'-9"
ASB3	19	#5	12"	'U'	6'-9 1/2"

6 S3.4 ASA & ASC SECTION VIEW
1/2" = 1'-0"

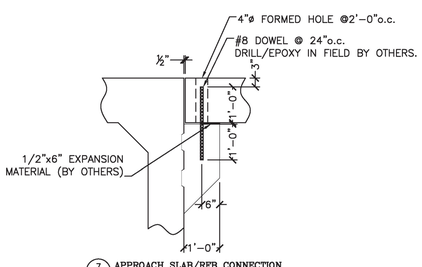

7 S3.4 APPROACH SLAB/RFB CONNECTION
1/2" = 1'-0"

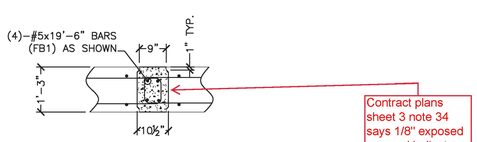

8 S3.4 APPROACH SLAB CONNECTION
1/2" = 1'-0"

Contract plans sheet 3 note 34 says 1/8" exposed agg and indicate method used

SPECIALTY ENGINEERING SERVICES PROVIDED BY:
CONCRETE ENGINEERING SOLUTIONS, LLC
PRECAST/PRESTRESSED CONCRETE
BY: STEVEN D. GOWAN, P.E.
MONTANA TEL: 406-579-1188
FAX: 406-579-1189

No.	Date	Revision	By
1	04/18/2017	REV. PER COMMENTS	SDG

STATE OF VERMONT
STUART D. GOWAN
NO 84443
CIVIL
LICENSED PROFESSIONAL ENGINEER
4/18/17

WHITE MOUNTAIN PRECAST, LLC
173 BUXTON INDUSTRIAL DRIVE-PO BOX 870
BENNINGTON, VERMONT 05457
PHONE: 603-428-3218
FAX: 603-428-7428

US Route 2, Rural Major Collector. Bridge 32
Town of Richmond, Project BF 0284(28)

25'-0" x 5'-3" Rigid Frame Bridge
Approach Slab Layout and Details

Project No. 7084
Date: 2/9/17
Designed by: SDG
Drawn by: SDG
Checked By: CFP
Scale: AS SHOWN

Prepared for:
G.W.Tatro Construction
PO Box 339
5195 VT Rt 15
Jeffersonville, VT 05464

DWG NO.
S3.4

C:\WORK\38-MACHE\17-39.01 GW TATRO CONST RICHMOND VT\RB 25X8 7865-170414.DWG 4/18/2017 3:41 PM