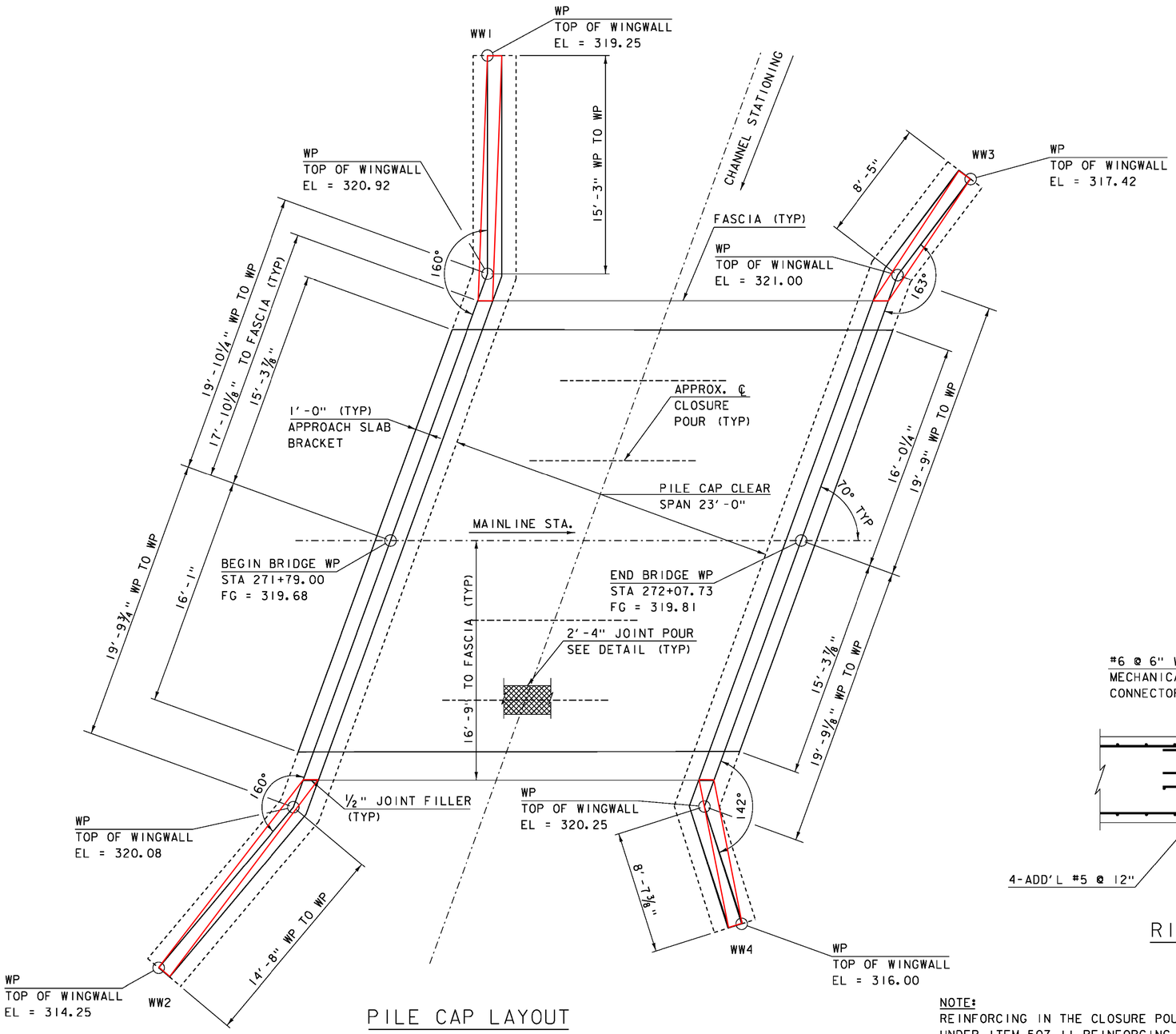


PILE CAP LAYOUT

SCALE ¼" = 1'-0"

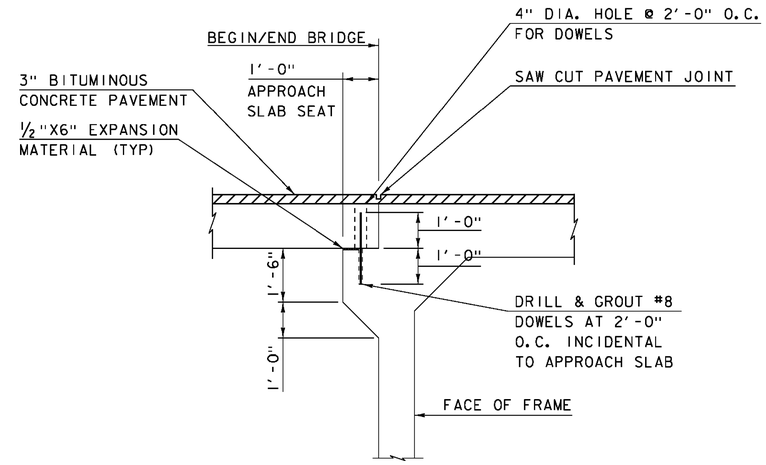


BRIDGE END DETAIL

SCALE ½" = 1'-0"

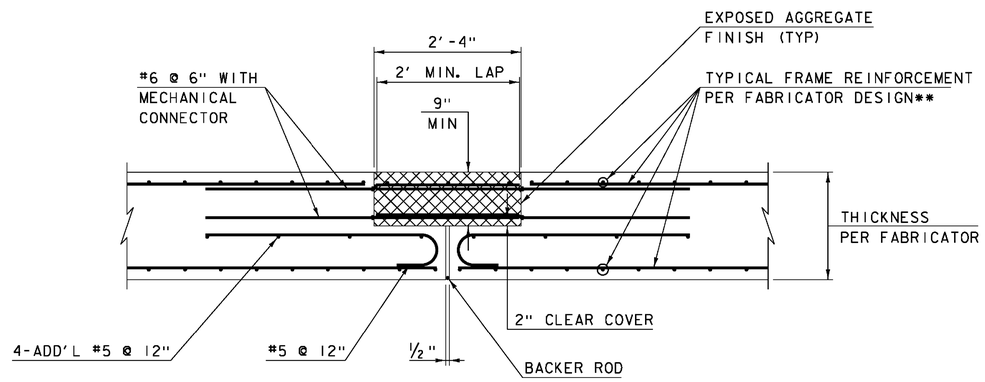


RIGID FRAME JOINT POUR DETAIL

SCALE 1" = 1'-0"

NOTE:
REINFORCING IN THE CLOSURE POUR WILL BE PAID UNDER ITEM 507.11 REINFORCING STEEL, LEVEL 1 (FPQ)

** DIMENSION SHOWN FOR ESTIMATING PURPOSES ONLY. ACTUAL DIMENSIONS SHALL BE DESIGNED BY FABRICATOR

SPECIAL PROVISION (HIGH PERFORMANCE CONCRETE, RAPID SET)

| | |
|---|---|
| PROJECT NAME: RICHMOND | |
| PROJECT NUMBER: BF 0284(28) | |
| FILE NAME: sl3c070sub.dgn | PLOT DATE: 13-SEP-2016 |
| PROJECT LEADER: R. YOUNG | DRAWN BY: S. COLEY |
| DESIGNED BY: S. COLEY | CHECKED BY: W. LAMMER |
| PILE CAP LAYOUT | SHEET 25 OF 54 |