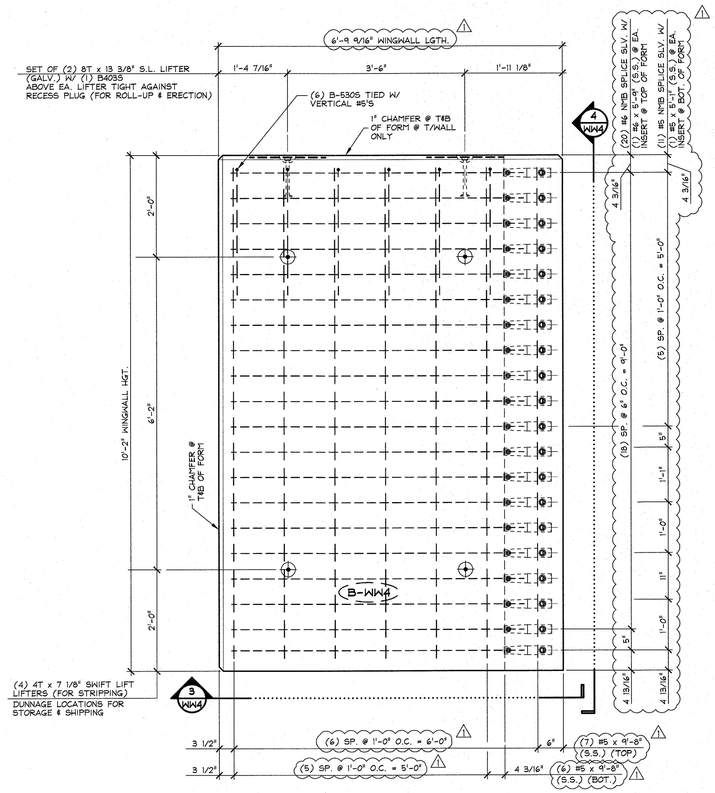


1 WW4 PLAN VIEW IN FORM (W-WW4)

1/2" = 1'-0"

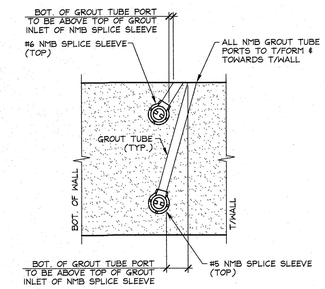


DETAIL - "A"

N.T.S.

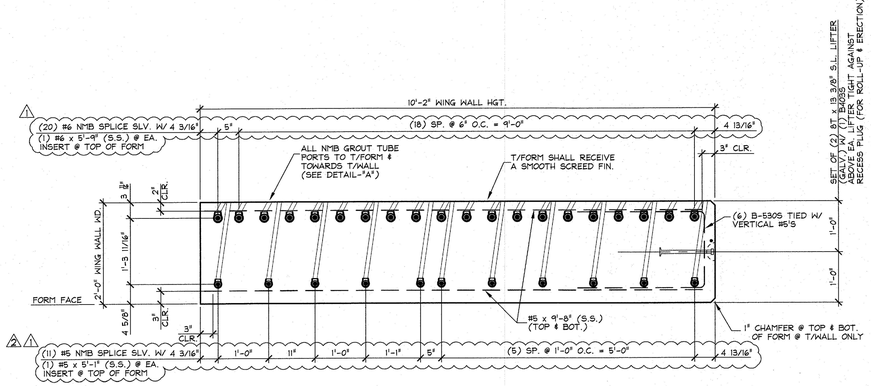


4 WW4 SIDE ELEVATION IN FORM

3/4" = 1'-0"

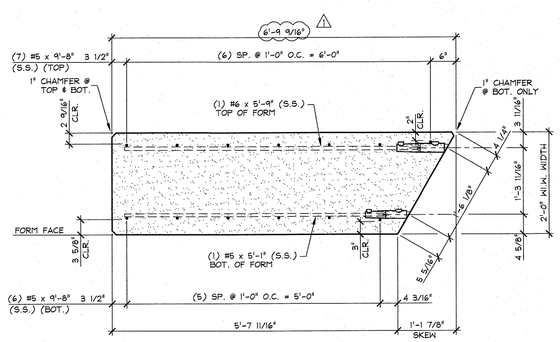


3 WW4 BOTTOM ELEVATION

3/4" = 1'-0"

**SHOP NOTE:**
28-DAY STRENGTH = 5,000 PSI
HANDLING STRENGTH = 3,500 PSI
MIX #44SMSCC

| MARK: B-WW4 | QTY.: 1 | WT.: 9.47 T | VOL.: 4.68 cy |
|---|---|---|---|

**MATERIAL LIST / WINGWALL**

| ITEM | MARK | DESCRIPTION | QTY. |
|---|---|---|---|
| 1 | | #6 N*B SPLICE SLEEVE (GALV.) △1 | 20 |
| 2 | | #5 N*B SPLICE SLEEVE (GALV.) | 11 |
| 3 | B-5305 | #5 BENT BAR (STAINLESS STEEL) | 6 |
| 4 | B-4035 | #4 BENT BAR (STAINLESS STEEL) | 2 |
| 5 | | | |
| 6 | | #6 x 5'-9" (S.S.) △1 | 20 |
| 7 | | #5 x 5'-1" (S.S.) | 11 |
| 8 | | #5 x 9'-8" (S.S.) | 13 |
| 9 | | | |
| 10 | | | |
| 11 | | | |
| 12 | | 8T x 13 3/8" SWIFT LIFT (GALV.) | 2 |
| 13 | | 4T x 7 1/8" SWIFT LIFT (GALV.) | 4 |
| 14 | | | |
| 15 | | | |

Vermont Agency of Transportation
RECEIVED
2016-16_Town_of_Bradford_Bridge_Bridge_3-14-17_Approved_03-15-2017.pdf
CK'D BY _____ OK'D BY G. ROY
March 14, 2017
RESUBMIT NO Approved
BY C. CARLSON DATE 03/15/2017

△2 3/14/17 REVISED AS PER ENGINEERS COMM. T.D.
△1 2/24/17 REVISED AS PER ENGINEERS COMM. T.D.

APPROVAL STAMP:

J.P. CARRARA & SONS INC.
Precast & Prestress Manufacturer
2464 CASE STR., MIDDLEBURY, VERMONT 05753 Phone:(802)388-6361 Fax:(802)388-9010

A.L. ST. ONGE
CONTRACTOR
MONTGOMERY, VERMONT

STATE OF VERMONT AGENCY OF TRANSPORTATION
COUNTY OF ORANGE

TOWN OF BRADFORD
VT 25B (RURAL MAJOR COLLECTOR)
BRIDGE NO.: 1 PROJECT NO.: BF 0191 (29)

PRECAST WING WALL DETAILS

DATE: DEC. 21, 2016
SCALE: NOTED
CHKD: DFTM: T.D.
JOB NO: 23506-016
DWG. NO: WW4

F:\VT-Bridges\23506-16 Bradford Abutments\23506-WW4.dwg, 3/14/2017 10:35:09 AM