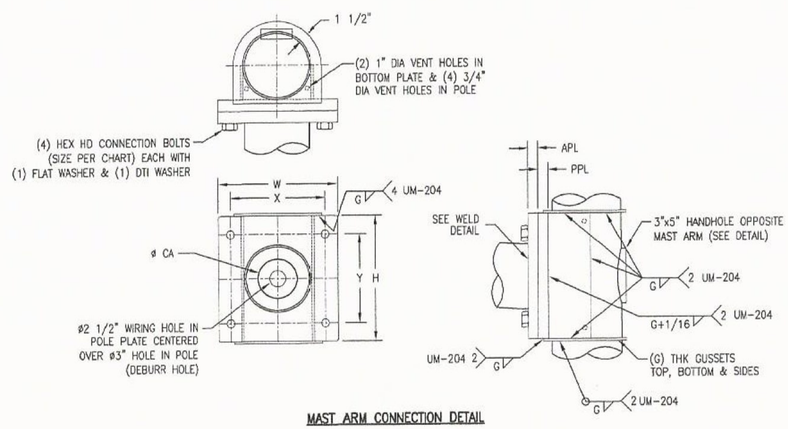

MAST ARM CONNECTION DETAIL

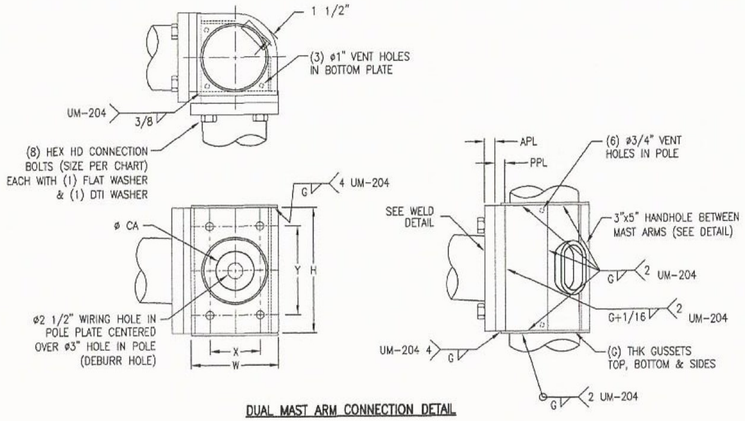

DUAL MAST ARM CONNECTION DETAIL

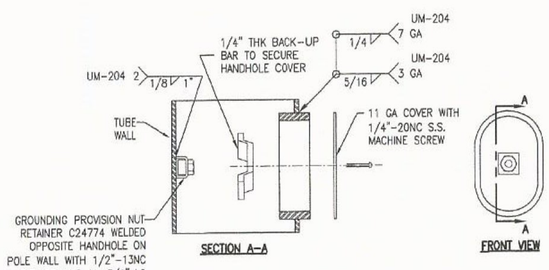

SECTION A-A

FRONT VIEW

4" x 6 1/2" HANDHOLE FRAME DETAIL

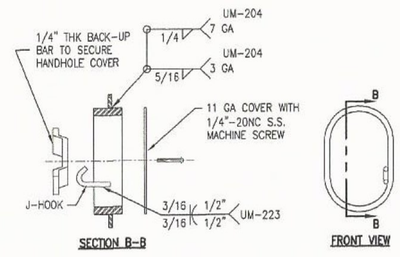

SECTION B-B

FRONT VIEW

3" x 5" HANDHOLE FRAME DETAIL

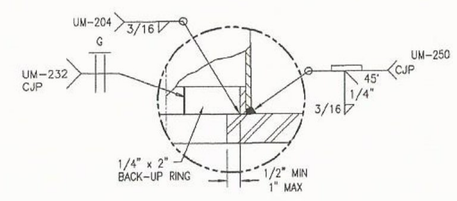

POLE BASE & ARM FLANGE WELD DETAIL

STATE OF VERMONT
DAVID N. FRITZ
No. 8694
Structural I
LICENSED PROFESSIONAL ENGINEER

6/27/17

STATE: VT	REQ# / SO# : DVT-0608A-1	REV	DESCRIPTION	DATE	REV BY	CHK BY
PROJECT NAME: TOWN OF LUDLOW, HES SGNL(44) / RT 103			REVISIONS			

ROUND TAPERED STEEL TRAFFFIC CONTROL STRUCTURE
WINDSOR COUNTY, VERMONT

Union Metal Corporation

This document and the contents herein are proprietary and the property of Union Metal Corporation. This document is not to be, copied, reproduced, or used for any reason except for the purposes which it was issued without the express written consent of Union Metal Corporation. Furthermore Union Metal Corporation reserves the right to recall this document and all copies at any time for any reason.

DESIGNED BY	CHECKED BY	DATE	SCALE	ENG REF
JEF	JdS	6/19/17	NTS	50400-SERIES
50400-B790			REVISION R0	SHEET 2 OF 2

Hardcopies of this document are considered uncontrolled and are to be used for reference only. These strong-bits document (in reference mode) are available to ensure that this document contains the current revisions contained in digital format, within but a single source and protected by edit restrictions.