MAST ARM, POLE & FOOTING DETAILS

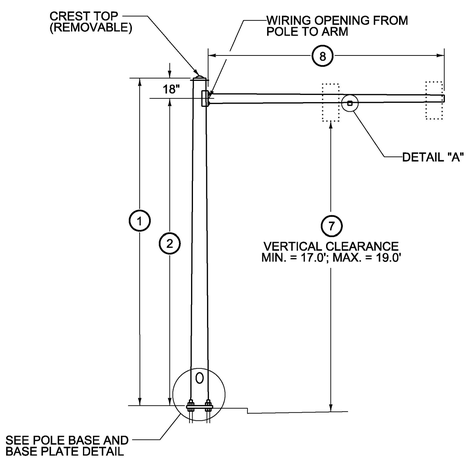

TYPE A MAST POLE & ARM

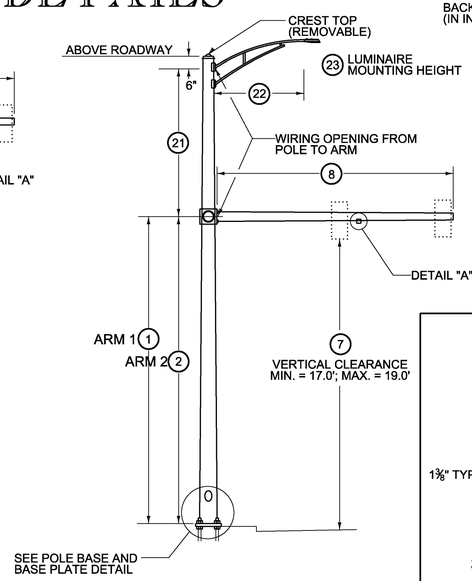

TYPE B MAST POLE & ARM

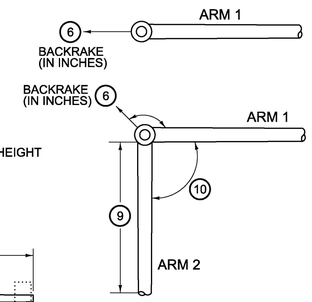

BACKRAKE DATA

ANCHOR BOLT DETAIL		
SIZE	L (in.)	T (in.)
1¼" x 48"	42	8
1½" x 60"	54	9
1¾" x 90"	84	9
2" x 96"	96	9

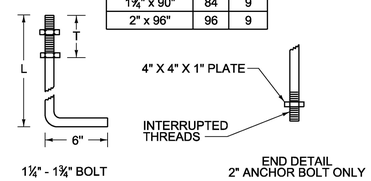

ANCHOR BOLT DETAIL

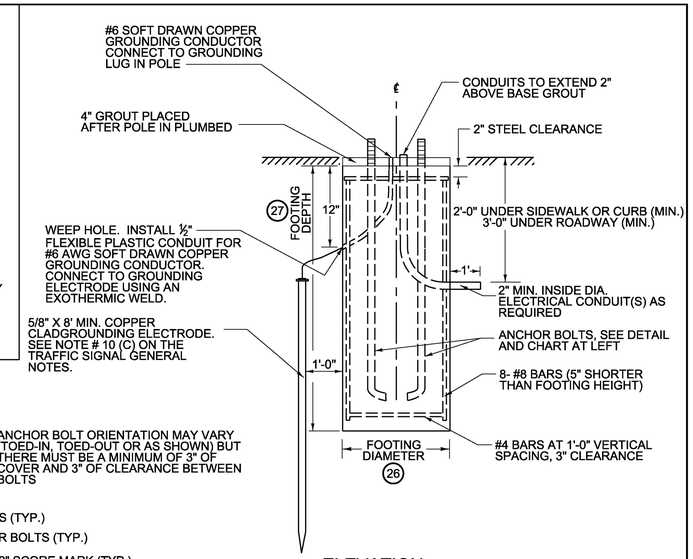

ELEVATION

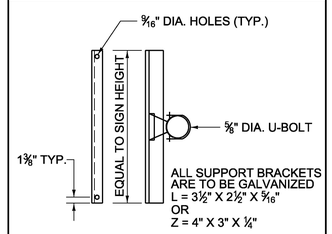

SIGN ON SINGLE MAST ARM

SIGN BRACKET DETAILS

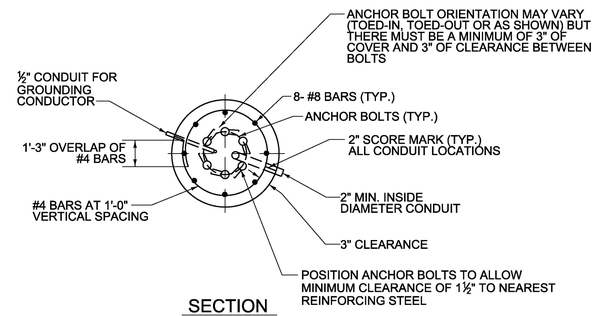

SECTION

MAST POLE FOOTING DETAIL
(SPREAD FOOTINGS OR PILES ARE OPTIONAL)

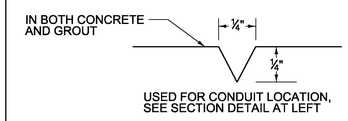

2" SCORE MARK DETAIL

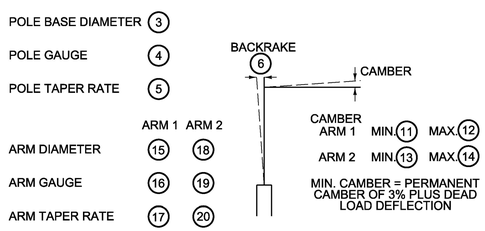

CAMBER DATA

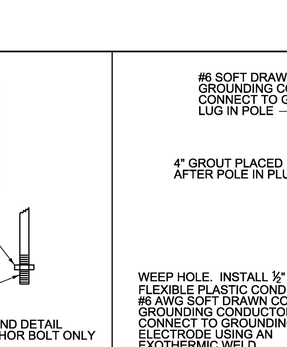

DETAIL "A"

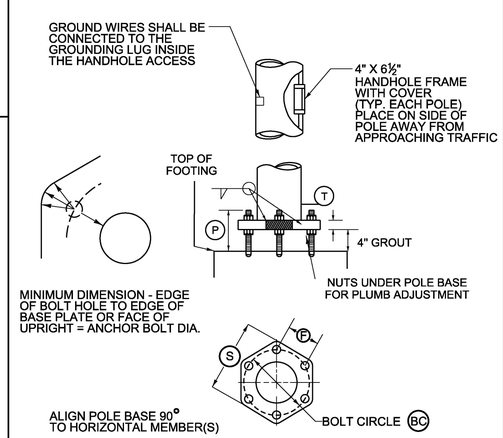

POLE BASE AND BASE PLATE DETAIL

NOTES

1. SEE TRAFFIC SIGNAL GENERAL NOTES FOR ADDITIONAL INFORMATION.
2. MANUFACTURER TO DETERMINE TYPE OF STRUCTURE REQUIRED.
3. MONOTUBES SHALL NOT BE USED FOR SIGNS OVER 10' HIGH.
4. MINIMUM CLEARANCE FROM SIGNS TO ANY TRAVEL LANE SHALL BE 17'.
5. CONTRACTOR SHALL VERIFY ALL GROUND ELEVATIONS.
6. LUMINAIRES, ALL ASSOCIATED EQUIPMENT AND LABOR TO INSTALL SHALL BE PAID FOR UNDER CONTRACT ITEM NOS. 679.45, 679.47 AND 679.50.
7. LUMINAIRES SHALL BE MOUNTED 30' ABOVE THE ROAD SURFACE.

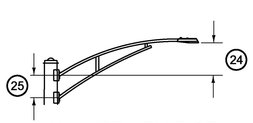

LUMINAIRE ARM RISE

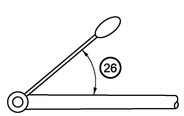

LUMINAIRE ORIENTATION

STRUCTURE DIMENSIONS

POLE DATA									ARM DATA														LIGHTING DATA						FOOTING DATA		BASE PLATE / BOLT DATA					
POLE	TYPE	1	2	3	4	5	6	7	8	9	10	11	12	13	14	15	16	17	18	19	20	21	22	23	24	25	26	27	28	BC	F	S	T	P	ANCHOR BOLT SIZE
MAP1	B	20'	20'					18'	50'			3°		3°								MAN	12'	MAN	MAN	MAN	45°								
MAP2	B	20'	20'					18'	30'	20'	90°	3°		3°								MAN	12'	MAN	MAN	MAN	45°								

MAN = TO BE DETERMINED BY MANUFACTURER

PROJECT NAME: LUDLOW
PROJECT NUMBER: HES SGNL(44)

FILE NAME: t13b020_frm.dgn
PROJECT LEADER: P. COBURN
DESIGNED BY: M. BOGACZYK
MAST ARM & POLE DETAILS SHEET

PLOT DATE: 4/19/2017
DRAWN BY: M. BOGACZYK
CHECKED BY: P. COBURN
SHEET 38 OF 43