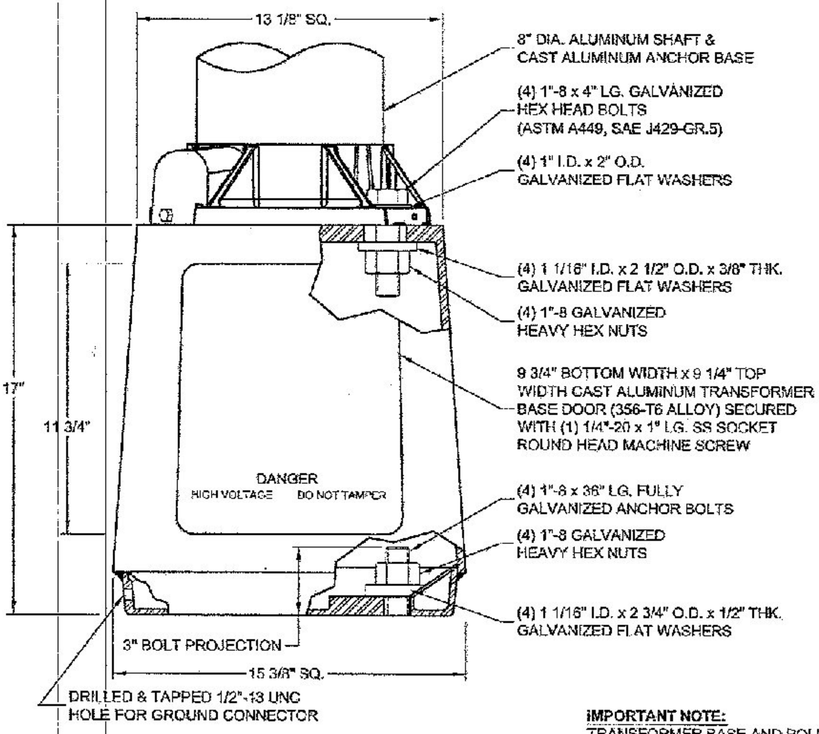

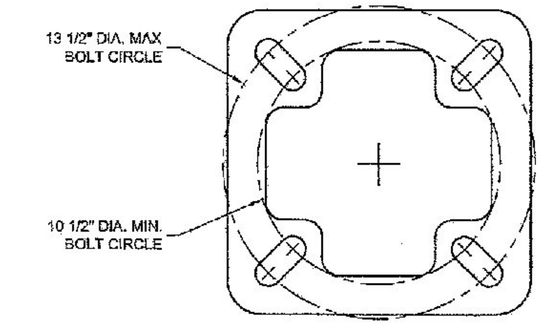

TOP BOLT CIRCLE

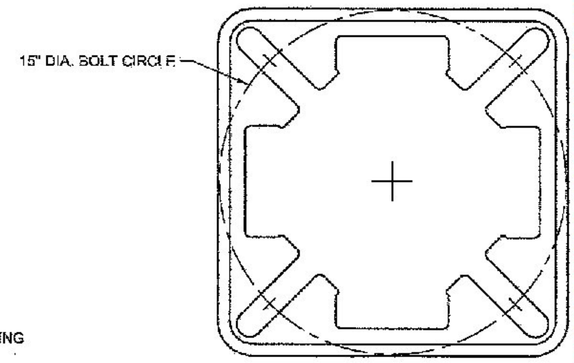

BOTTOM BOLT CIRCLE

IMPORTANT NOTE:
TRANSFORMER BASE AND POLE TO BE LEVELED AS ONE UNIT, USING LEVELING SHIMS IF REQUIRED.

CAUTION (REF AASHTO)

BEFORE THE INSTALLATION OF THIS BASE IN SERVICE, USER SHOULD AUGMENT CONSULT THEIR AUTHORIZED USER/SUPPLIER REGARDING PROPOSED APPLICATION, LOADING TO BE SUSTAINED AND INSTALLATION INSTRUCTIONS. FAILURE(S) CAN RESULT FROM MISAPPLICATION, OVERLOADING/UNDER LOADING OR INCORRECT INSTALLATION.

TO APPROACH OPTIMUM STATIC LOADS, USE THE LARGEST POSSIBLE BOLT CIRCLE AND LINE STEEL WASHER SIZES SPECIFIED BELOW.

FOR 10 1/2" THRU 13 1/2" DIA. TOP BOLT CIRCLE
USE 2 1/2" DIA. X 1 9/16" I.D. X 3/8" TK. OR
2 3/4" DIA. X 1 1/16" I.D. X 1/2" TK. WASHERS

FOR 13" THRU 16" DIA. BOTTOM BOLT CIRCLE
USE 2 3/4" DIA. X 1 1/16" OR 1 9/16" I.D. X 1/2" TK. WASHERS

FOR ALL MOUNTINGS UNDER 13" DIA.
SEE SPECIAL MOUNTING INSTRUCTIONS

FOR OPTIMUM PERFORMANCE, MOUNT TRANSFORMER BASE ON A FLAT AND LEVEL FOUNDATION SURFACE. SHIM BASE WHEN REQUIRED. IF GAPS ARE PRESENT, THOROUGHLY FILL VOIDS WITH A NON-SHRINK GROUT. TORQUE GROUND MOUNTING NUTS TO 150 FT. LBS.

BREAKAWAY BASE
APPROVED BY F.H.W.A. TO 1986 AASHTO REQUIREMENTS

DO NOT SCALE

valmont

Valmont Industries, Inc. Structures Division
20805 Eaton Ave Farmington, Minnesota 55024-7932
Phone: (651) 463-8990 (800) 599-7577
Fax: (651) 463-3349

****CONFIDENTIAL****
The information contained in this drawing is privileged and confidential, and may be protected from disclosure. Please be aware that any use or dissemination of this drawing may be subject to legal restriction or sanction.

TITLE:	S T-BASE 13"-15" BC BLK DR 8" RD 17"
MODEL NO.:	08R1315B17
MATERIAL:	ALUMINUM ALLOY
FINISH:	POWDER PAINT BLACK DBL
PROJECT:	FERRISBURGH, VT NHG SGNL (42)
SOLD TO:	HIGHWAY TECH
SHIP TO:	
P.O. NO:	10659
REF:	HIGHWAY TECH

REV	DATE	REVISION DESCRIPTION	BY
△			
△			
△			

QTY:	2
DWN BY:	PVB
CHK'D BY:	
APPR BY:	
DATE:	06-14-16
DWG NO:	A400807
PAGE:	3/3

STATE OF VERMONT
BARRY N. SLAVEK
No. 99194
Structural 1
LICENSED
PROFESSIONAL ENGINEER
6/16/16

EAST COAST SIGNALS APPROVED FOR SUBMITTAL 6-24-16