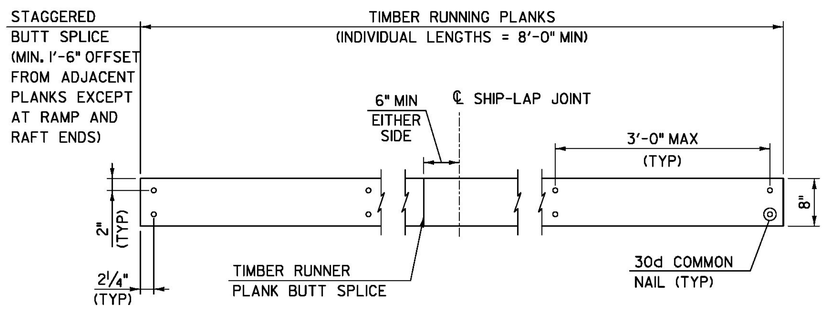

NOTE: TIMBER RUNNER PLANK NAILS SHALL BE CENTERED ON NAIL LAMINATED DECK PANEL LAMINATES.

RUNNER PLANK ATTACHMENT DETAIL - PLAN

SCALE: 1" = 1'-0"

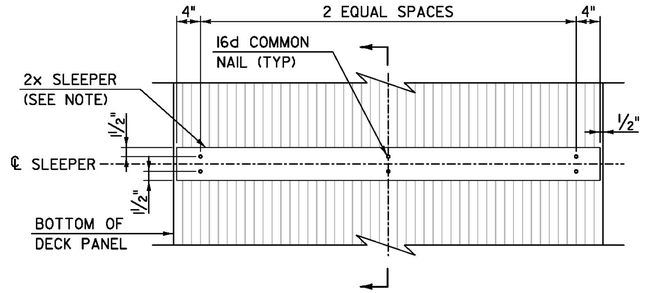

SLEEPER DETAIL - PLAN

SCALE: 1" = 1'-0"

NOTE:

1. ⅛" THICK ELASTOMERIC PADS CONFORMING TO THE LENGTH AND WIDTH OF THE SLEEPER SHALL BE PLACED BENEATH THE SLEEPERS AND ATTACHED TO THE SLEEPERS WITH THE SAME NAILS USED TO ATTACH THE SLEEPER TO THE DECK.

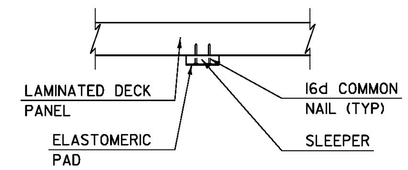

SECTION

SCALE: 1" = 1'-0"

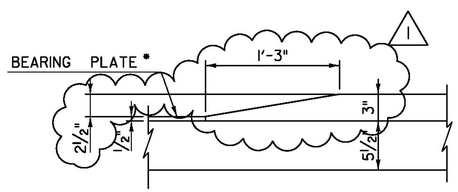

TIMBER RUNNER PLANK BEVEL DETAIL 1

SCALE: 1½" = 1'-0"

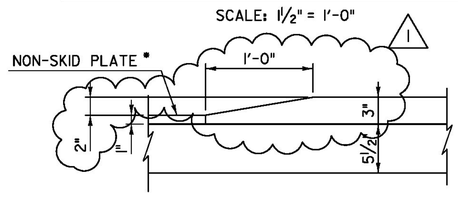

TIMBER RUNNER PLANK BEVEL DETAIL 2

SCALE: 1½" = 1'-0"

* NON-SKID AND BEARING PLATES ARE COMPONENTS OF THE SPECIAL PROVISION (EXPANSION DEVICE, HINGED SLIDING PLATE ASSEMBLY). SEE SHEET 51 FOR LOCATION AND DETAILS.

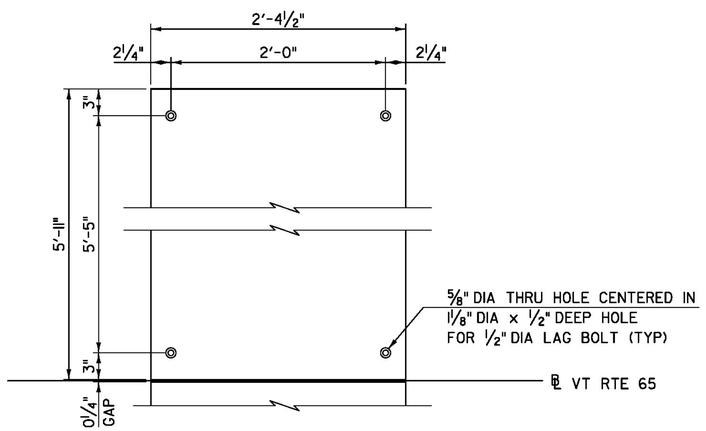

STEEL COVER PLATE PLAN OVER RAFT FIELD SPLICE LOCATIONS

SCALE: 1½" = 1'-0"

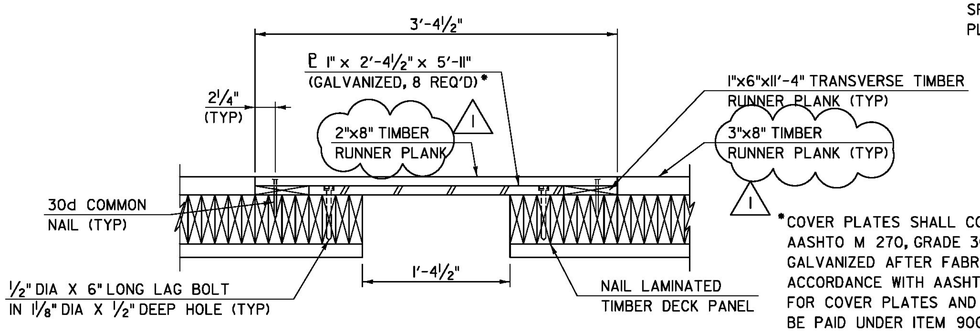

*COVER PLATES SHALL CONFORM TO AASHTO M 270, GRADE 36 AND SHALL BE GALVANIZED AFTER FABRICATION IN ACCORDANCE WITH AASHTO M 111. COSTS FOR COVER PLATES AND HARDWARE SHALL BE PAID UNDER ITEM 900.670, "SPECIAL PROVISION (NAIL LAMINATED TIMBER DECK PANEL)".

TIMBER RUNNER PLANK AND STEEL COVER PLATE DETAIL OVER RAFT FIELD SPLICES

SCALE: 1½" = 1'-0"

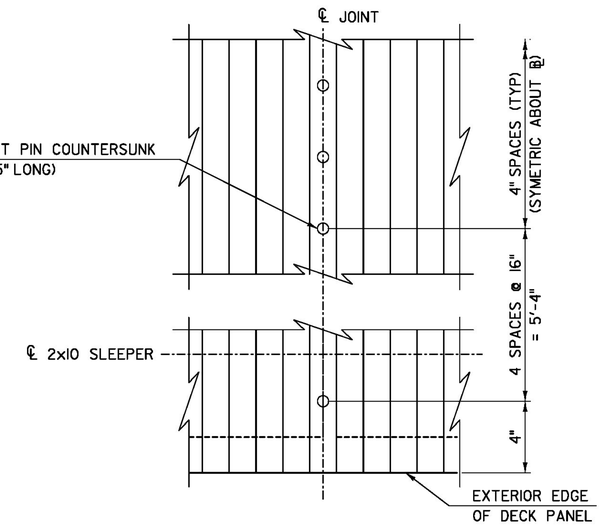

SHIP-LAP DETAIL - PLAN

SCALE: 3" = 1'-0"

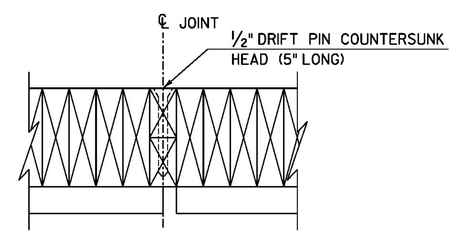

SHIP-LAP DETAIL - SECTION

SCALE: 3" = 1'-0"

REVISION	DESCRIPTION	DATE
REVISION #1	RUNNER PLANK THICKNESS CHANGE	2/4/2014

PROJECT NAME: BROOKFIELD
PROJECT NUMBER: BRF FLBR(2)

T·Y·LIN INTERNATIONAL

FILE NAME: z12el34bdrdeckdets.dgn
PROJECT LEADER: J. OLUND
DESIGNED BY: T. POULIN
DECK PANEL DETAILS

PLOT DATE: 2/5/2014
DRAWN BY: S. MORGAN
CHECKED BY: J. OLUND
SHEET 46 OF 70