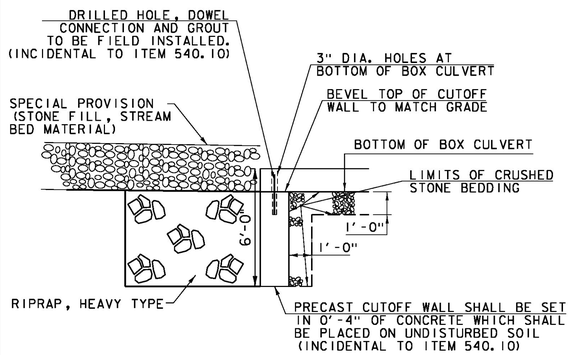

INLET CUTOFF WALL DETAIL

NOT TO SCALE

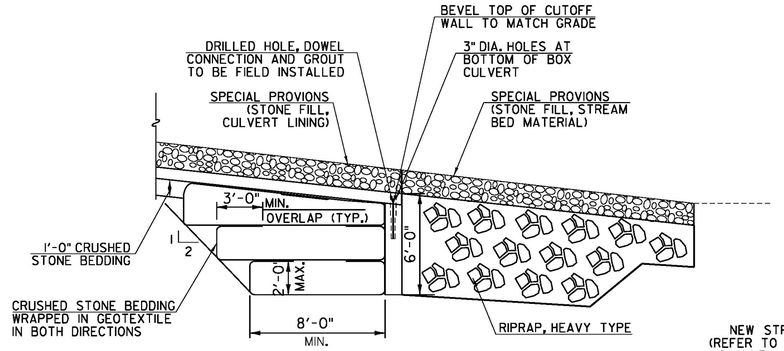

OUTLET CUTOFF WALL DETAIL

NOT TO SCALE

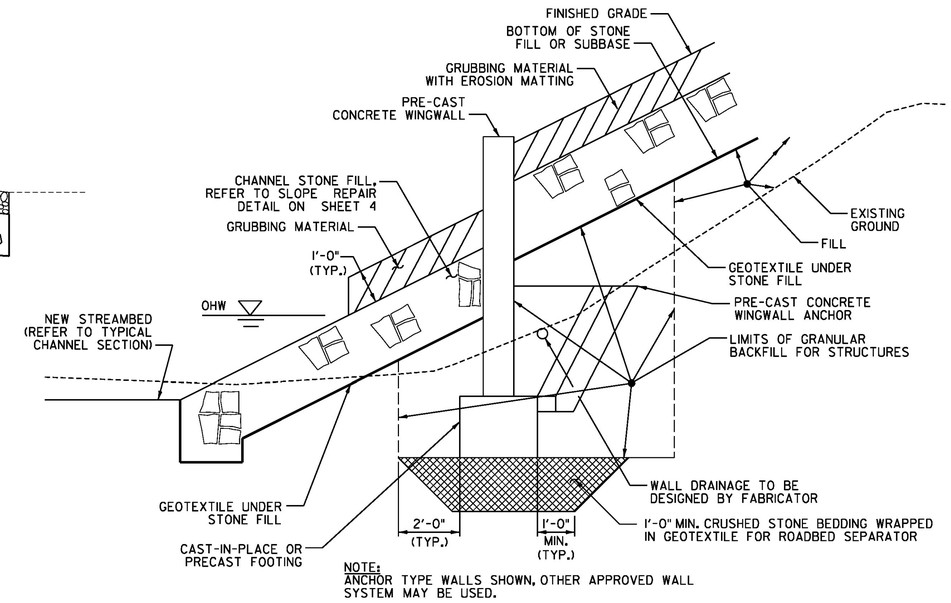

NOTE:
ANCHOR TYPE WALLS SHOWN, OTHER APPROVED WALL SYSTEM MAY BE USED.

WINGWALL EARTHWORK SECTION

NOT TO SCALE

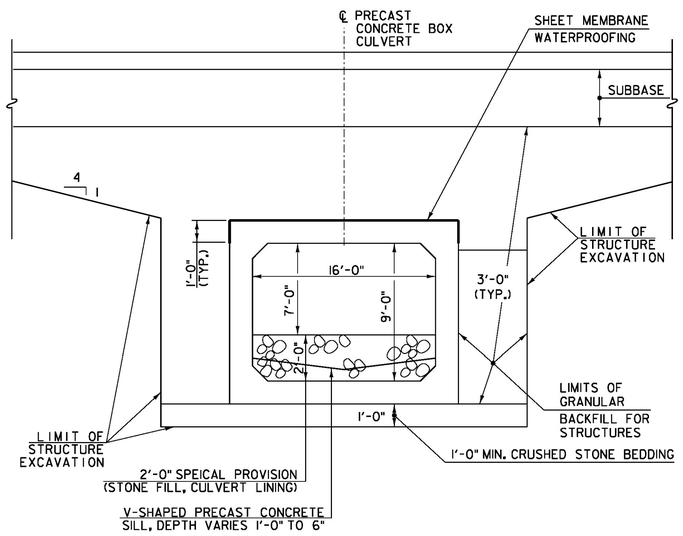

PRECAST CONCRETE BOX TYPICAL SECTION

NOT TO SCALE

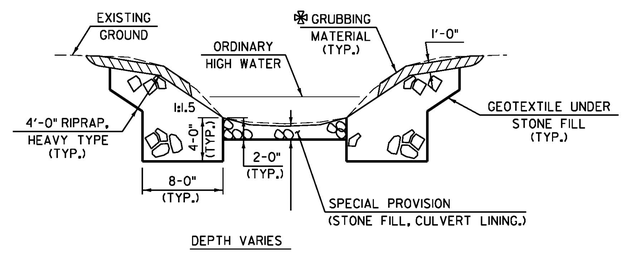

CHANNEL TYPICAL SECTION

NOT TO SCALE

✠ WHENEVER CHANNEL SLOPE INTERSECTS ROADWAY SUBBASE, GRUBBING MATERIAL SHALL BEGIN AT THE BOTTOM OF SUBBASE.

FOUNDATION NOTES:

1. FOUNDATIONS SHALL BE DESIGNED BASED ON THE BEARING PLOTS IN THE GEOTECHNICAL REPORT INCLUDED IN THE CONTRACT DOCUMENTS.
2. THE COEFFICIENT OF FRICTION FOR SLIDING SHALL BE:
   PRECAST FOOTINGS.....0.40
   CAST-IN-PLACE FOOTINGS....0.55

   THE LATERAL EARTH PRESSURE COEFFICIENTS SHALL BE:
   K_o = 0.44 (BOX)
   K_a = 0.63 (WINGWALLS WITH 1.5H TO 1V BACKFILL SLOPE)
   K_a = 0.42 (WINGWALLS WITH 2H TO 1V BACKFILL SLOPE)

   DESIGN UNIT WEIGHT OF BACKFILL = 140 POUNDS PER CUBIC FOOT
3. IF LOOSE OR SOFT SOILS ARE ENCOUNTERED, THE EXISTING MATERIALS SHALL BE UNDERCUT 12" AND A GEOTEXTILE MEETING THE REQUIREMENTS OF SECTION 649 FOR GEOTEXTILE FOR ROAD BED SEPARATOR, SHALL BE PLACED ON THE EXCAVATED SURFACE AND BACKFILLED WITH ITEM 204.30, GRANULAR BACKFILL FOR STRUCTURES.

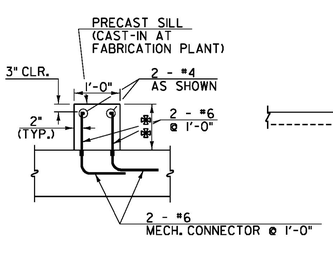

✠✠DEPTH VARIES 1'-0" TO 6"

SECTION A-A

NOT TO SCALE

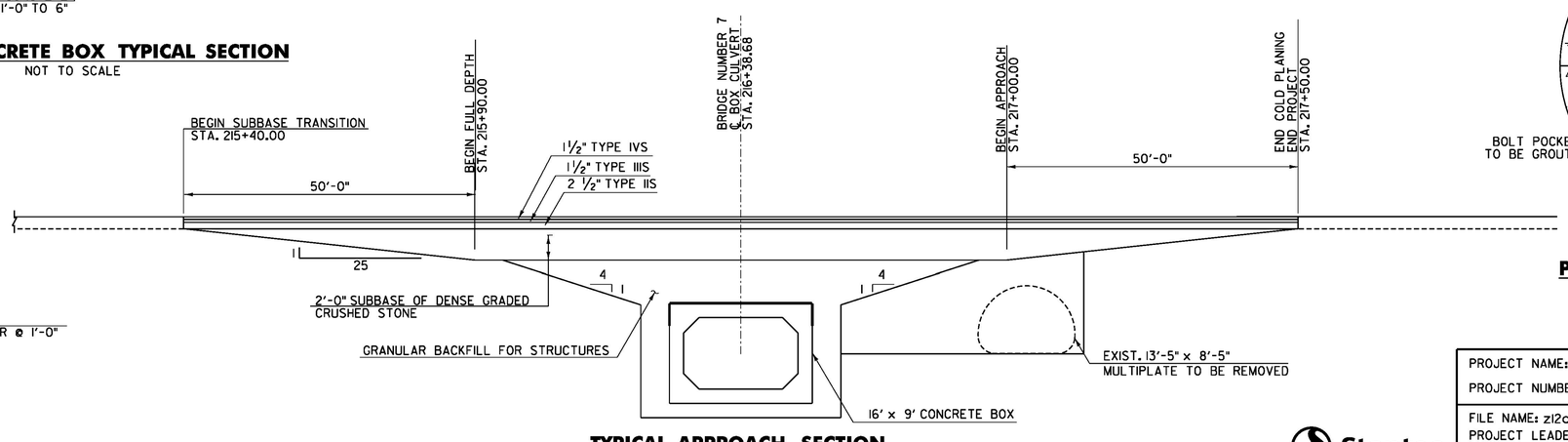

TYPICAL APPROACH SECTION

NOT TO SCALE

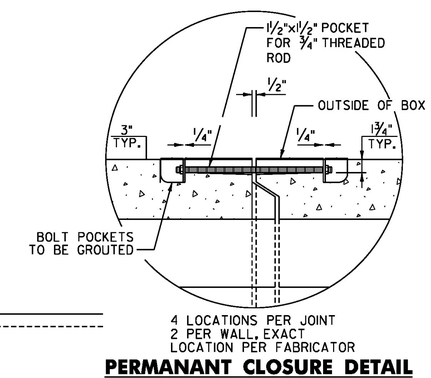

PERMANANT CLOSURE DETAIL

NOT TO SCALE

Stantec

PROJECT NAME: BRAINTREE	
PROJECT NUMBER: ER STP 0187(12)	
FILE NAME: z12c526typ.dgn	PLOT DATE: 1/27/2014
PROJECT LEADER: G. EDWARDS	DRAWN BY: J. HUNGERFORD
DESIGNED BY: J. HUNGERFORD	CHECKED BY: G. BOGUE
BRIDGE 7 DETAILS SHEET	SHEET 31 OF 72