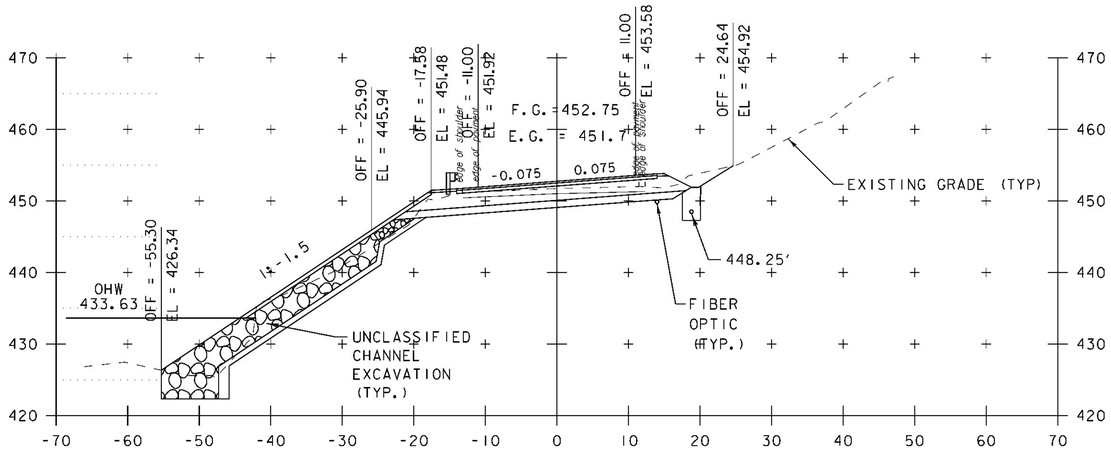

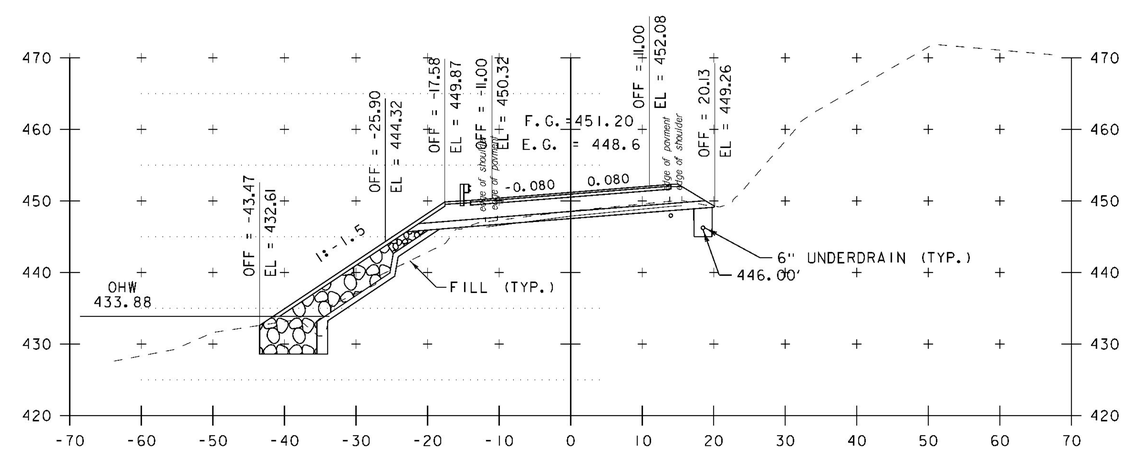

325+50

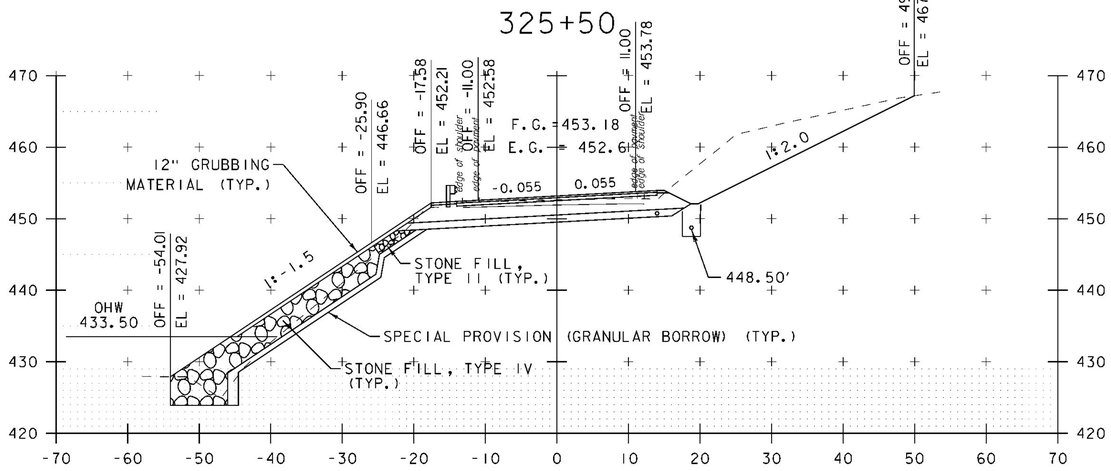

326+50

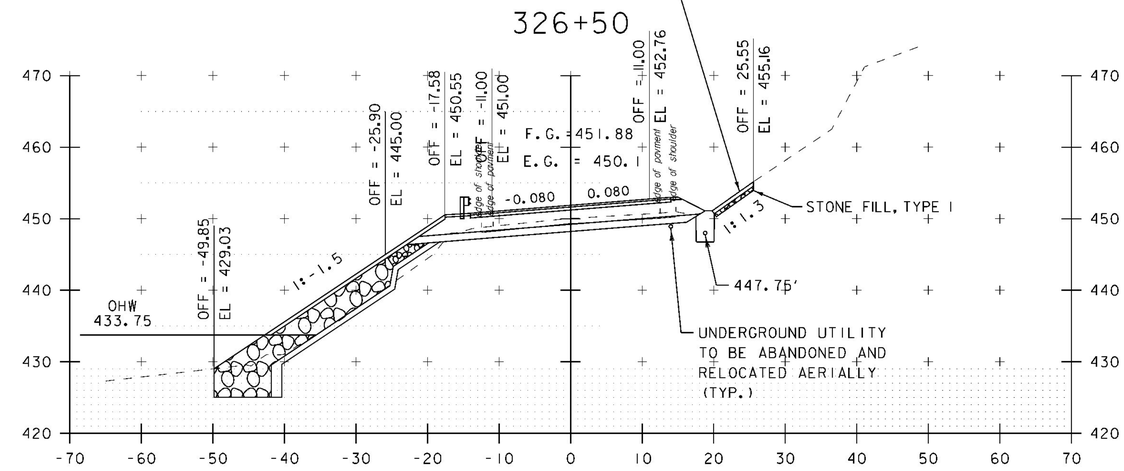

325+00

326+00

0 10 20
SCALE IN FEET

325+00 - 326+50

PROJECT NAME: SHARON	
PROJECT NUMBER: ER STP 0147(20)	
FILE NAME: z12c410xs.dgn	PLOT DATE: 3/31/2015
PROJECT LEADER: J. TUCKER	DRAWN BY: B. MACK
DESIGNED BY: B. BRESLEND	CHECKED BY: A. SANZ
VT 14 CROSS SECTION SHEET 2	SHEET 52 OF 66