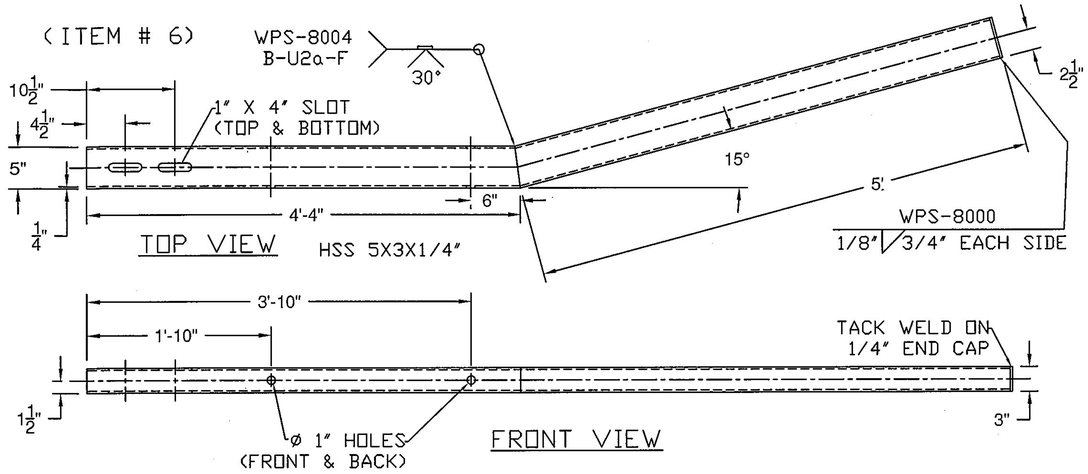

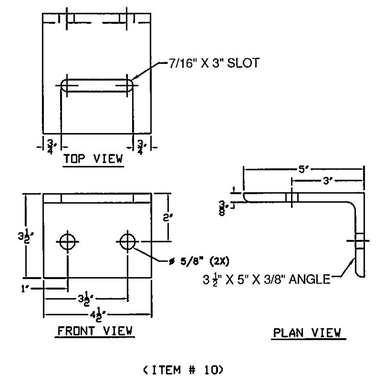

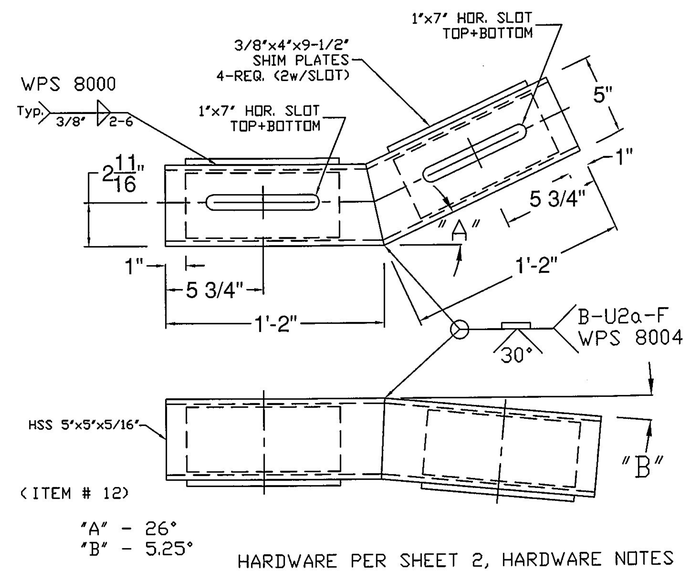

HARDWARE PER SHEET 2, HARDWARE NOTES

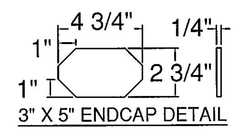

3" X 5" ENDCAP DETAIL

Vermont Agency of Transportation
RECEIVED
JAY-APPROVED RAILING SHOPS FEB 21 2017.pdf
CK'D BY RFOSTER/CHENETTE OK'D BY WBP
February 15, 2017
RESUBMIT NO Approved AsNoted
BY WPELLETIER DATE 02/21/2017

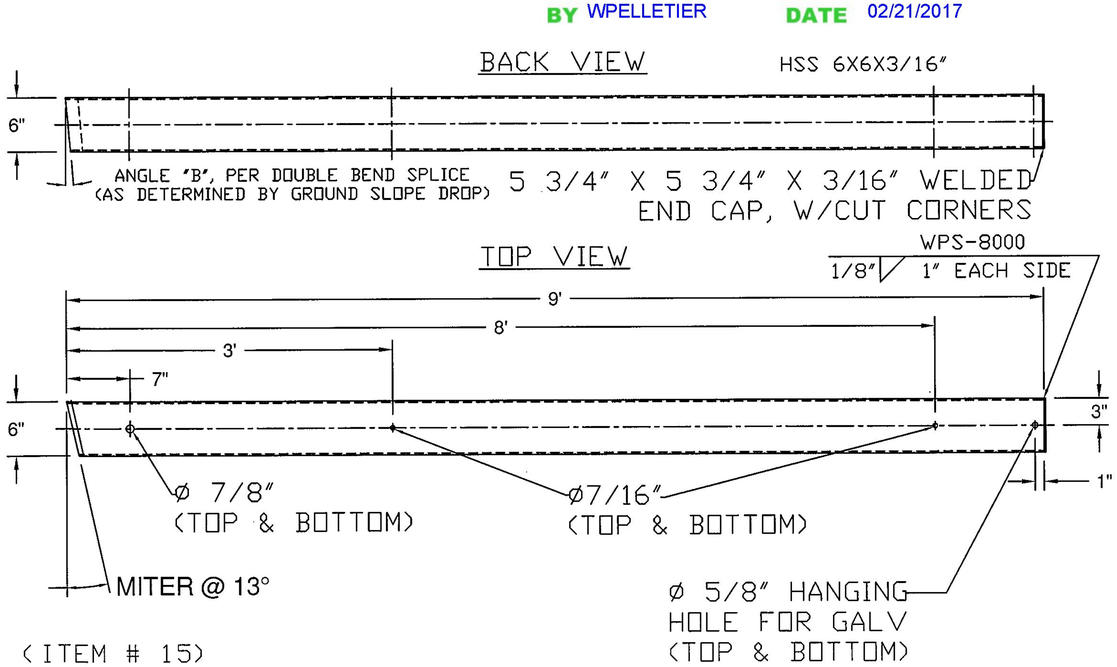

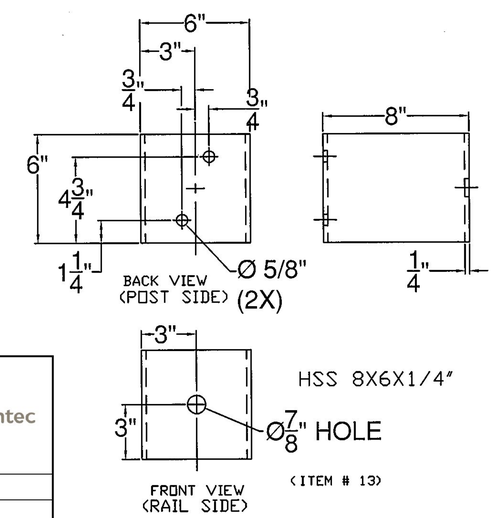

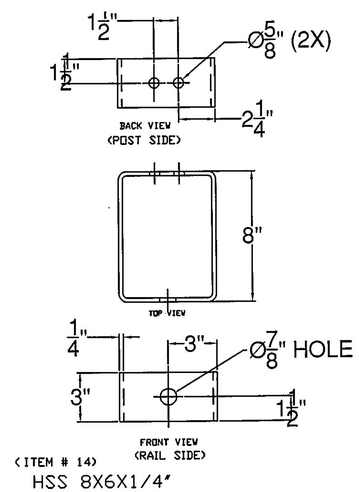

APPROVED: Approval of drawings and/or procedures indicates concurrence with the information presented and does not relieve the Contractor or Fabricator of compliance with all specifications and code requirements

APPROVED AS NOTED	X
REVISE AND RESUBMIT	
NOT REVIEWED	

Stantec

Date: 02/21/17

By: Michael J. Chenette

This review by Stantec Consulting Services Inc. is for the sole purpose of ascertaining conformance with the general design concept. This review shall not mean that Stantec Consulting Services Inc approves the detail design inherent in the shop drawings, responsibility for which shall remain with the Contractor. Submitting same, and such review shall not relieve the Contractor of his responsibility for errors or omissions in the shop drawing or of his responsibility for meeting all requirements of the Contract Documents. The contractor is responsible for dimensions to be confirmed and correlated at the job site, for information that pertains solely to the fabrication processes or to techniques of construction and installation and for coordination of the work of all subtrades.

END CAP FOR ITEM #15

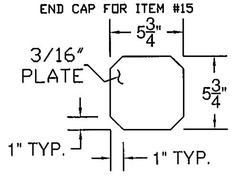

ITEM #: 621.725

SHEET 3 OF 5

STRUCTURAL STEEL TO COMPLY W/ ASTM A6

TOLERANCE UNLESS OTHERWISE NOTED:
FRACTIONS = ± 1/16"
ANGLES = ± 1/2°
DIAMETERS = ± 1/32"

GUARD RAIL TO BRIDGE RAIL TRANSITION DETAILS SHEET

VT ROUTE 242 (RURAL MAJOR COLLECTOR) BRIDGE # 10
TOWN OF JAY, COUNTY OF ORLEANS, VT.

REV	NO.	DATE	DESCRIPTION	BY
E V	1	2/8/17	REVISED PER 12/22/16 MARK-UP	D.K.

REV	NO.	DATE	DESCRIPTION	BY
E V				

ELDERLEE, INC.
OAKS CORNERS, NEW YORK 14518
email: dlong@elderlee.com / epeek@elderlee.com
Tel: 315-789-6670 Fax: 315-789-6615

CERTIFIED FABRICATOR

ORTHOGRAPHIC PROJECTION

DRAWN	D.K.	12/7/16
CHECKED	E.P.	12/7/16
APPROVED	D.L.	12/9/16
SCALE	SCHEMATIC	
DRAWING NO.	F.R. LaFAYETTE-JAY T	