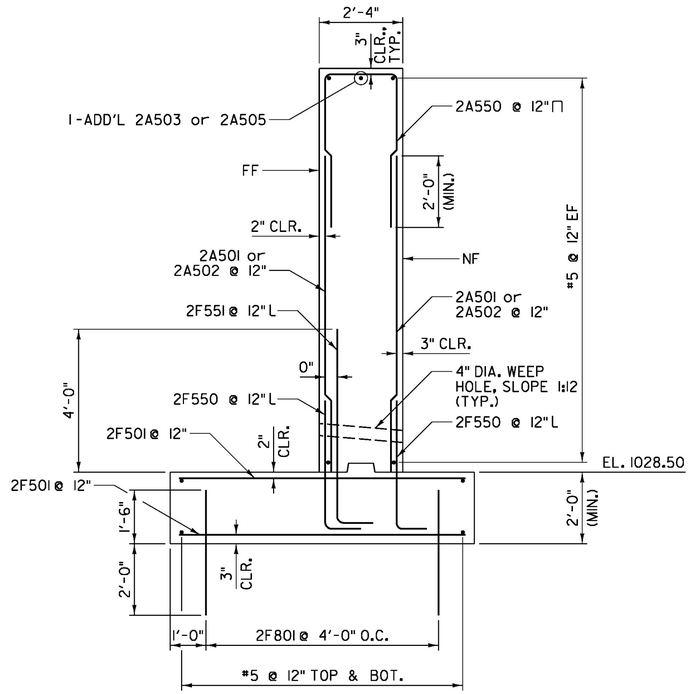

ABUTMENT NO. 2 REINFORCEMENT

SCALE: ½" = 1'-0"

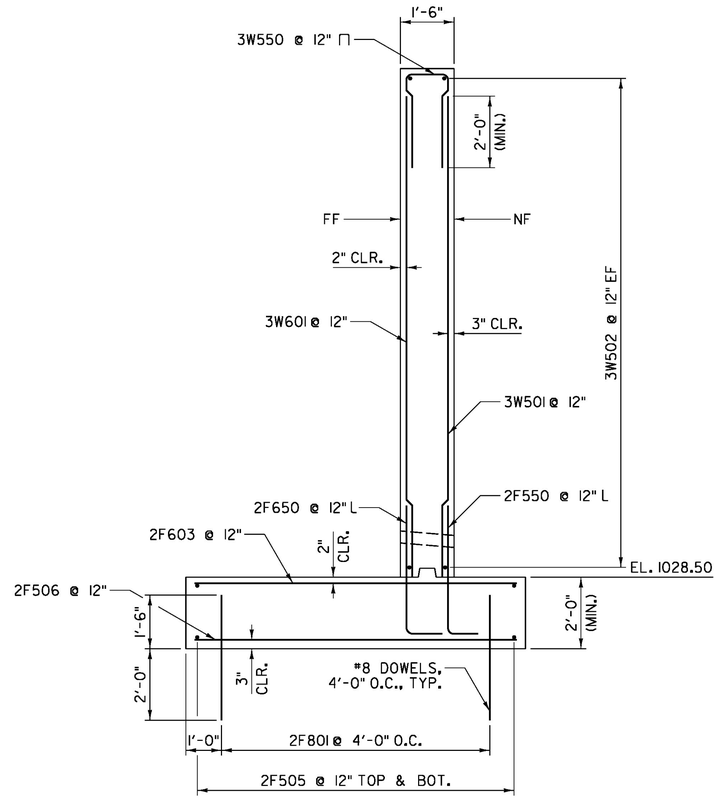

WINGWALL 3 REINFORCEMENT

SCALE: ½" = 1'-0"

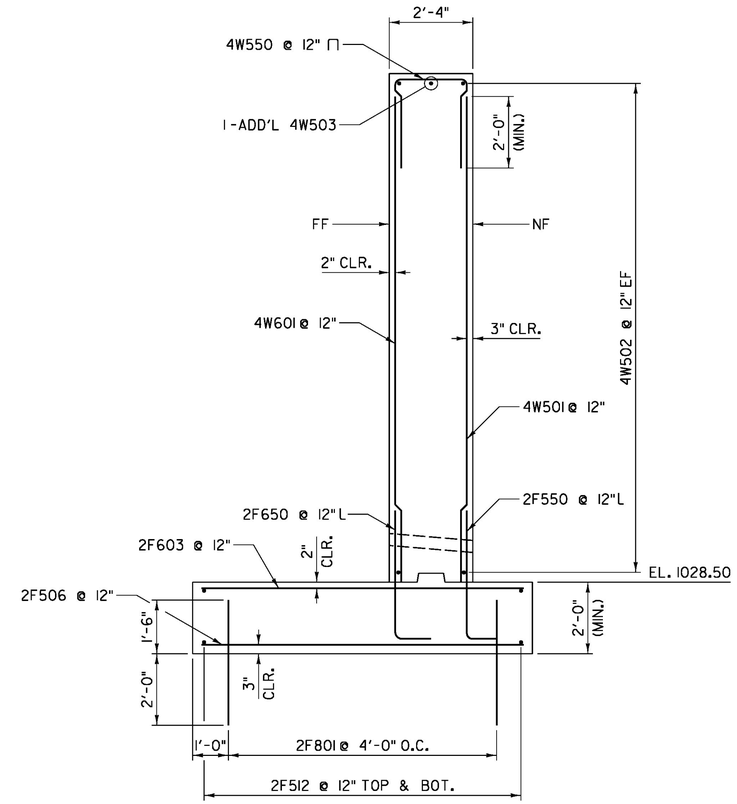

WINGWALL 4 REINFORCEMENT

SCALE: ½" = 1'-0"

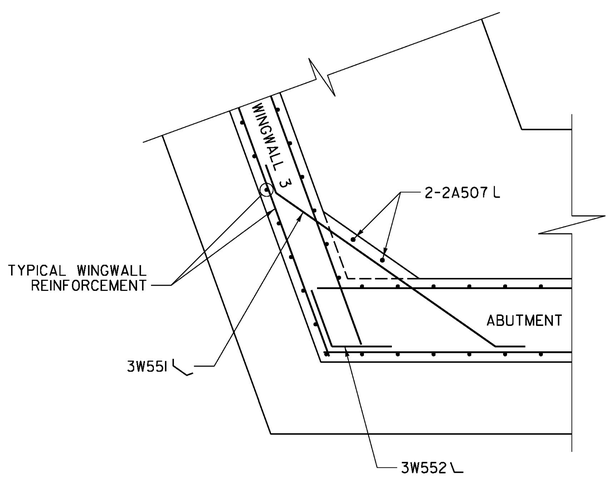

WINGWALL 3 CORNER REINFORCEMENT (BELOW FILLET)

SCALE: ½" = 1'-0"

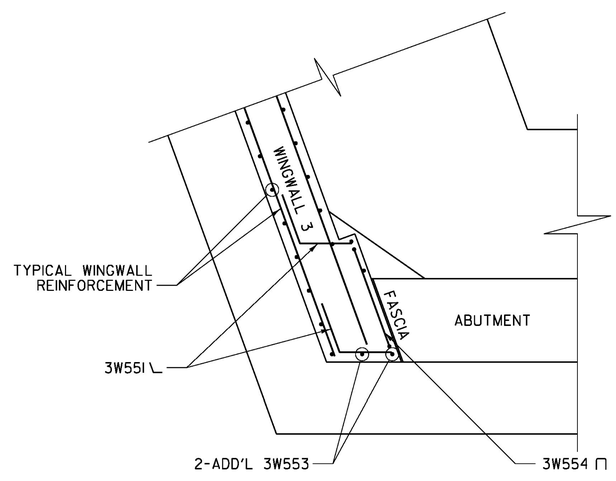

WINGWALL 3 CORNER REINFORCEMENT (BELOW FILLET)

SCALE: ½" = 1'-0"

LEGEND:

NF = NEAR FACE
FF = FAR FACE
EF = EACH FACE
▲ = CUT TO FIT IN FIELD

ALL SPLICES 2'-0" UNLESS NOTED OTHERWISE.

Stantec

PROJECT NAME: JAY	
PROJECT NUMBER: BHF 0278(3)	
FILE NAME: z12c154abuts.dgn	PLOT DATE: 8/16/2016
PROJECT LEADER: M. CHENETTE	DRAWN BY: J. SOTER
DESIGNED BY: N. TIRK	CHECKED BY: T. KNIGHT
ABUTMENT NO. 2 REINFORCEMENT SECTIONS	SHEET 38 OF 72