Drawing Sheet : R03				BAR LIST													
Bar Mark	Qty	Size	Total Length	Type	'A'	'B'	'C'	'D'	'E'	'F'	'G'	'H'	'J'	'K'	'O'	'W'
5B09	2	#5	10'-0"	S5	1'-0"	1'-1"	6'-0"	11"			1'-0"					
5C01	4	#5	5'-0"	17		2'-3"	6"	2'-3"								
5C02	4	#5	5'-6"	17		2'-6"	6"	2'-6"								
5C03	12	#5	6'-6"	17		3'-0"	6"	3'-0"								
5C04	34	#5	4'-2"	17		6"	2'-11"	9"								
5C05	24	#5	4'-8"	T11		6"	1'-6 K"	1'-7 K"	1'-0"			1'-3"		11"		
5C06	10	#5	3'-1"	L85		6"	1'-4 K"	1'-2 K"				1'-3"		8 K"		
5C10	8	#5	4'-10"	T11		8"	1'-6 K"	1'-7 K"	1'-0"			1'-3"		11"		
5C11	8	#5	4'-4"	17		8"	2'-11"	9"								
5C12	10	#5	3'-3"	L85		7"	1'-4 K"	1'-3 K"				1'-3"		8 K"		
5C13	10	#5	4'-3"	17		7"	2'-11"	9"								
5C15	3	#5	6'-9"	T1	5 K"	2'-6"	5"	2'-6"	5"		5 K"					
5C16	2	#5	5'-5"	S10		2'-6"	5"	2'-6"								
5C17	3	#5	8'-7"	T1	5 K"	3'-5"	5"	3'-5"	5"		5 K"					
5C18	2	#5	7'-3"	S10		3'-5"	5"	3'-5"								
6C07	24	#6	13'-4 K"	S10		6'-5"	6 K"	6'-5"								
6C08	36	#6	17'-6 K"	S10		8'-6"	6 K"	8'-6"								

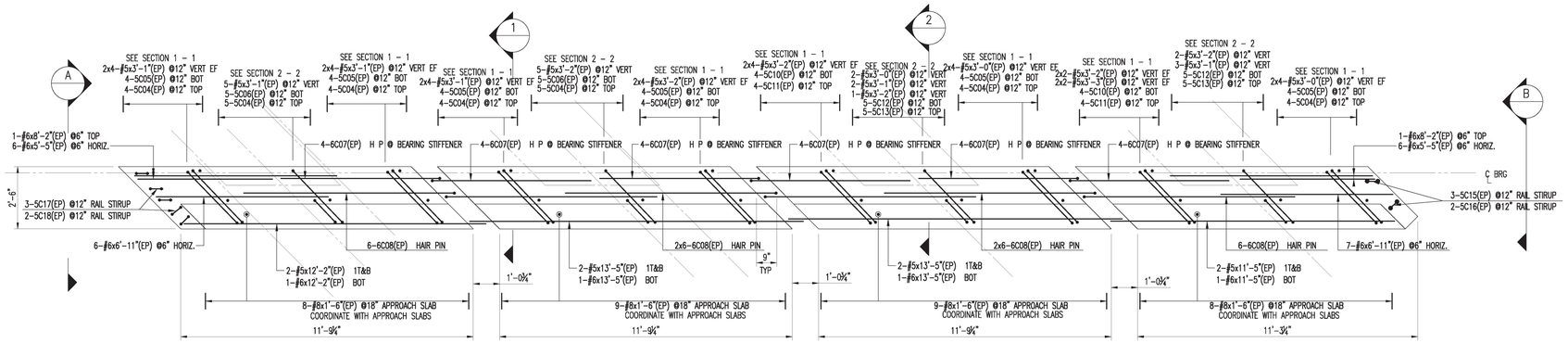

ABUTMENT 1 CURTAIN WALL PLAN

BHF 0169 (9)
100 LF 3" S.B. GTI PLASTIC (2 ROWS)

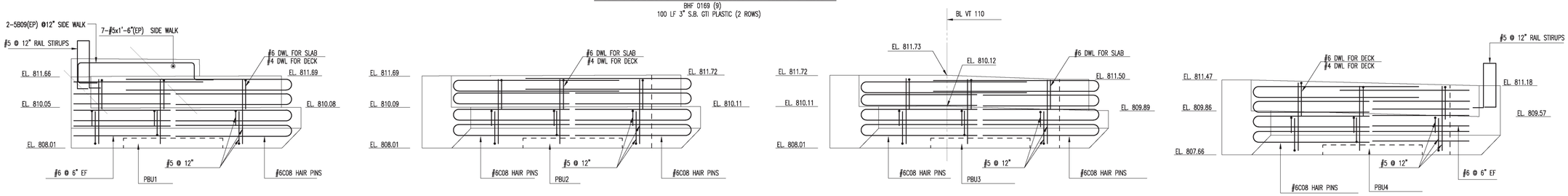

ABUTMENT 1 CURTAIN WALL ELEVATION

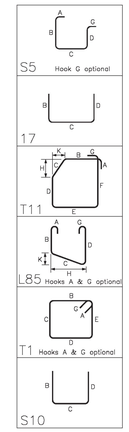

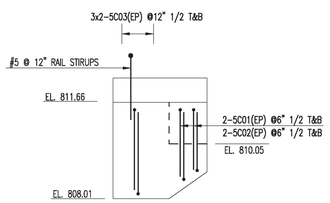

ELEVATION A – A

CURTAIN WALL

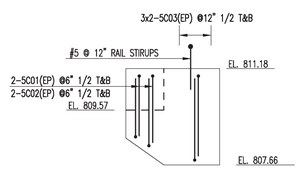

ELEVATION B – B

CURTAIN WALL

400 LF 3" S.B. GTI PLASTIC (2 ROWS)

ALL MATERIAL ON THIS DRAWING SHALL BE ASTM A775 GRADE 60 "EPOXY COATED" U.N.O.

ENGINEER. THIS DWG IS FOR PURPOSE OF PLACING REBARS ONLY

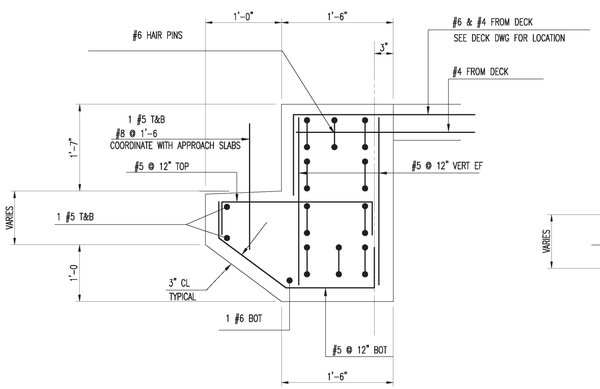

SECTION 1 – 1

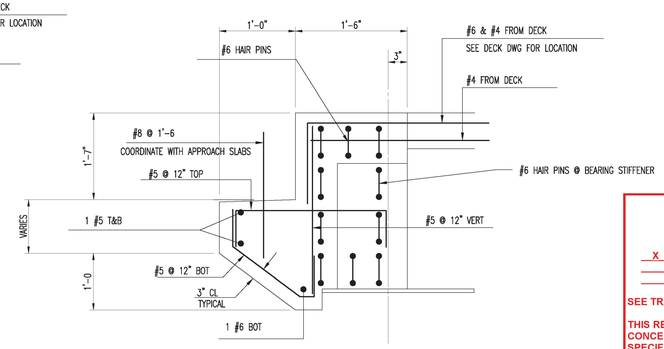

SECTION 2 – 2

ELEVATIONS PROVIDED ALONG TOP OF CURTAINWALL AND DIMENSIONS TO BACK OF APPROACH SLAB SEAT ARE FINAL VALUES AFTER 1/2" NOMINAL DECK GRINDING. ADJUST ELEVATIONS AND DIMENSIONS SHOWN HEREIN TO REFLECT CONDITIONS IMMEDIATELY AFTER FABRICATION FOR PLACEMENT OF REINFORCING IN ORDER TO CLARIFY BAR PLACEMENT WITH RESPECT TO PBU FABRICATION SIZE.

T.Y. LIN INTERNATIONAL

THE STAMPED DOCUMENTS ARE HEREBY:

X APPROVED
APPROVED AS NOTED
REVISE AND RESUBMIT

SEE TRANSMITTAL FOR ADDITIONAL INFORMATION AS APPLICABLE.

THIS REVIEW IS FOR GENERAL CONFORMANCE WITH DESIGN CONCEPT ONLY. ANY DEVIATION FROM THE PLANS OR SPECIFICATIONS NOT CLEARLY NOTED BY THE CONTRACTOR HAS NOT BEEN REVIEWED. REVIEW BY THE ENGINEER SHALL NOT RELIEVE THE CONTRACTOR OF THE CONTRACTUAL RESPONSIBILITY FOR ANY ERRORS OR DEVIATION FROM THE CONTRACT REQUIREMENTS.

JOSH OLUND — REVIEWER
March 27, 2017 — DATE

Vermont Agency of Transportation
RECEIVED
BRIDGE_SLPBU_REBAR_SUBMITTAL.www.pdf
CK'D BY TYLin OK'D BY TYLin
March 14, 2017
RESUBMIT No Approved
BY Kristin Higgins DATE 3/27/2017

No.	Description	Date	By
2	FINAL APPROVAL	3/7/17	RLL
1	APPROVAL	2/22/17	RLL
0	APPROVAL	1/26/17	RLL

Revisions and Issue Record

The full intent and purpose of this drawing is the placing of reinforcing steel bars ONLY. It is NOT to be used as a means of communication between the Architect, Engineer, Contractor or any other Sub-trades.

THIS DRAWING IS NOT TO BE SCALED.

HarrisRebar Barker Steel — National Strength. Local Service.

DETAILED AT:
CANAAN
NEW HAMPSHIRE

Project: CHELSEA BHF 0169
CHELSEA VT

Drawing: CURTAINWALL PLAN
BHF 0169 (9)

Customer: CPM CONSTRUCTORS

Engineer:

Refer to Release:

Date	Drawn	Chkd.	JOB No.	Dwg. No.
1/26/17	RLL		33506241	R03

W:\rdmdry\Project\33506241\Placing Drawings\DWGs\R03.dwg