Vermont Agency of Transportation
RECEIVED

CK'D BY TYLin OK'D BY TYLin
March 8, 2017
RESUBMIT No Approved AsNoted
BY Kristin Higgins DATE 3/10/2017

T.Y. LIN INTERNATIONAL

THE STAMPED DOCUMENTS ARE HEREBY:

____ APPROVED
__X__ APPROVED AS NOTED
____ REVISE AND RESUBMIT

SEE TRANSMITTAL FOR ADDITIONAL INFORMATION AS APPLICABLE.

THIS REVIEW IS FOR GENERAL CONFORMANCE WITH DESIGN CONCEPT ONLY. ANY DEVIATION FROM THE PLANS OR SPECIFICATIONS NOT CLEARLY NOTED BY THE CONTRACTOR HAS NOT BEEN REVIEWED. REVIEW BY THE ENGINEER SHALL NOT RELIEVE THE CONTRACTOR OF THE CONTRACTUAL RESPONSIBILITY FOR ANY ERRORS OR DEVIATION FROM THE CONTRACT REQUIREMENTS.

JOSH OLUND — REVIEWER
March 10, 2017 — DATE

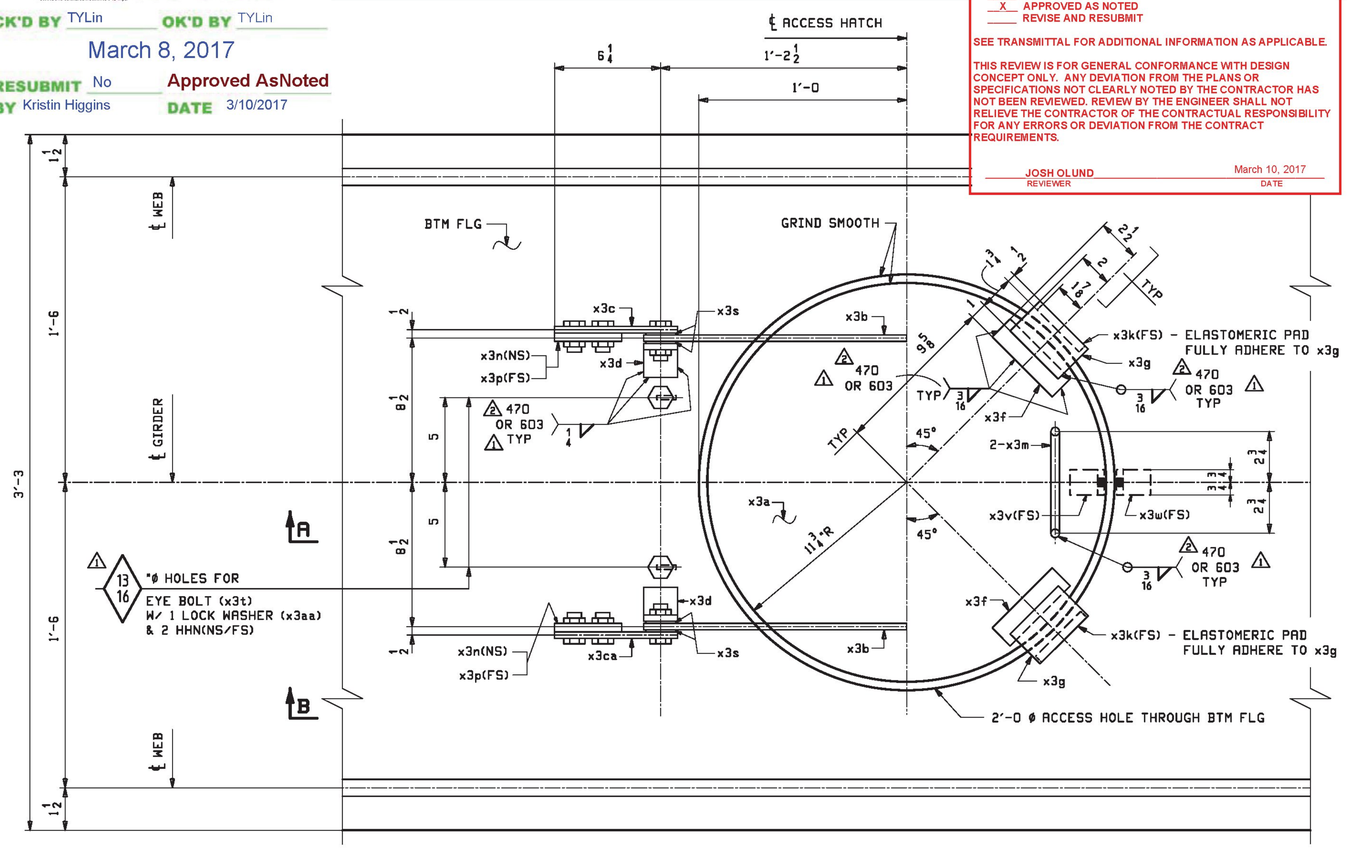

B ~ ACCESS HATCH ~ X3MH1

HATCH OPENS TOWARDS BACKWALL.
SEE GIRDER PLAN VIEW FOR ORIENTATION.

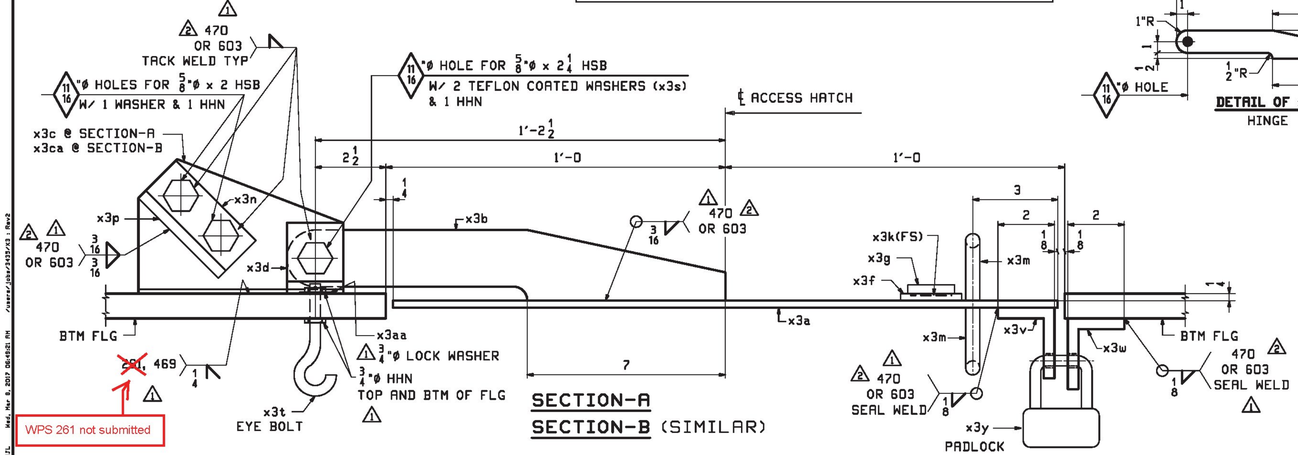

SECTION-A
SECTION-B (SIMILAR)

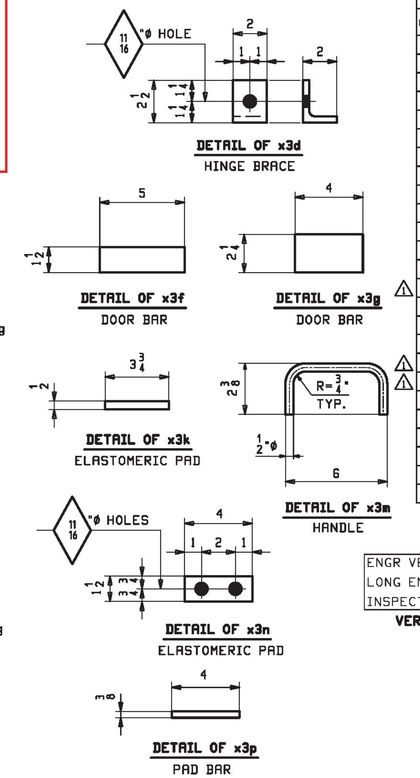

ABM INFO		SHIP	BILL OF MATERIAL					JOB NO.	DRAWING NO.	REV.
								696	X3	2
PAGE	LINE	MARK	QTY	MARK	MATERIAL	LENGTH FT	LENGTH INCHES	REMARKS	WT	PROCUREMENT NOTES
		X3MH1	8		ACCESS HATCH				67	
3	B		8	x3a	PL ¼x23½	1	11½		39	
3	C		16	x3b	PL ⅜x2½	1	3½		4	
3	D		8	x3c	PL ⅜x4¾	0	7¼		4	
3	D		8	x3ca	PL ⅜x4¾	0	7¼		4	
3	E		16	x3d	L 2½x2x⅜	0	2		0.88	
3	F		16	x3f	PL ⅜x1½	0	5		0.80	
3	G		16	x3g	PL ½x2¼	0	4		1	
3	H		16	x3k	1/8x1/2 x3-3/4 PAD			ELASTOMERIC		
3	J		16	x3m	½ Ø ROD	0	9	A36	0.50	
3	K		16	x3n	1/2x1-1/2x4 PAD			ELASTOMERIC		
3	L		16	x3p	PL ½x⅜	0	4		0.21	
3	M		32	x3s	5/8"DIA x 1/8" THICK			TEFLON COATED WASHERS		
3	N		16	x3t	1 1/2"DIA x 9" EYE BOLT			3/4"DIA THREAD A307		
3	E		8	x3v	L 2½x2x⅜	0	2		0.88	
3	E		8	x3w	L 2½x2x⅜	0	2		0.88	
3	P		8	x3y	Padlock			McMaster#1905R12 KEYED ALIKE		
3	Q		16	x3aa	3/4"DIA LOCK WASHERS					
3	R		32		¾ Ø HHN			A563 (GR-DH)	0.19	
3	S		32		⅝ Ø HSB	0	2	A325-1	0.32	
3	T		16		⅝ Ø HSB	0	2¼	A325-1	0.32	
3	U		48		⅝ Ø HHN			A563 (GR-DH)	0.12	
3	V		32		⅝ Ø HSW			F436-1	0.04	

DO NOT SHIP FROM THIS SHEET

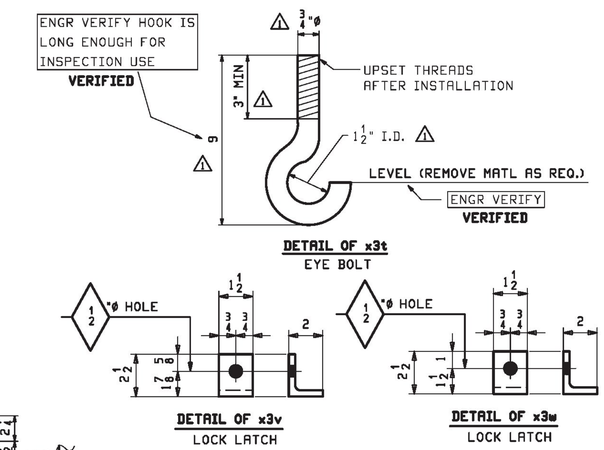

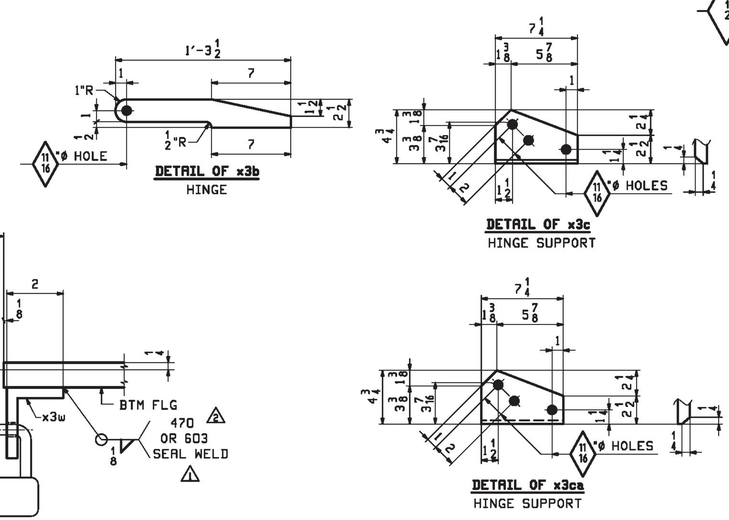

ACCESS HATCH TO BE PAINTED WITH SAME COATINGS AS GIRDER

REV.	DATE	REMARKS	DWN	CHK	APVL	SHOP
2	03/07	REVISED PER APPROVALS	RRL	WJL		
1	02/15	REVISED PER APPROVALS	RRL	WJL		
0						

MATERIAL:	SURFACE PREP. & PAINT:	HOLES:	SHOP BOLTS:
M270-50, U.N.	SEE GN1	AS NOTED	AS NOTED

DESCRIPTION: ACCESS HATCH

CASCO BAY STEEL STRUCTURES, INC.
1 WALLACE AVE. SOUTH PORTLAND, ME 04106
PHONE (207) 780-6722 FAX. (207) 780-6726
TENSOR 3435

STRUCTURE: VT ROUTE 110 OVER 1ST BRANCH WHITE RIVER BRIDGE NO. 9

DRAWN: RRL	DATE: 12/09		
CHKD: WJL	DATE: 12/21/16		
LOCATION: TOWN OF CHELSEA, ORANGE COUNTY, VT.	JOB NO. 696	DWG NO. X3	
PROJ NO. BHF 0169(9)		REV. 2	
CUSTOMER: CPM CONSTRUCTORS			