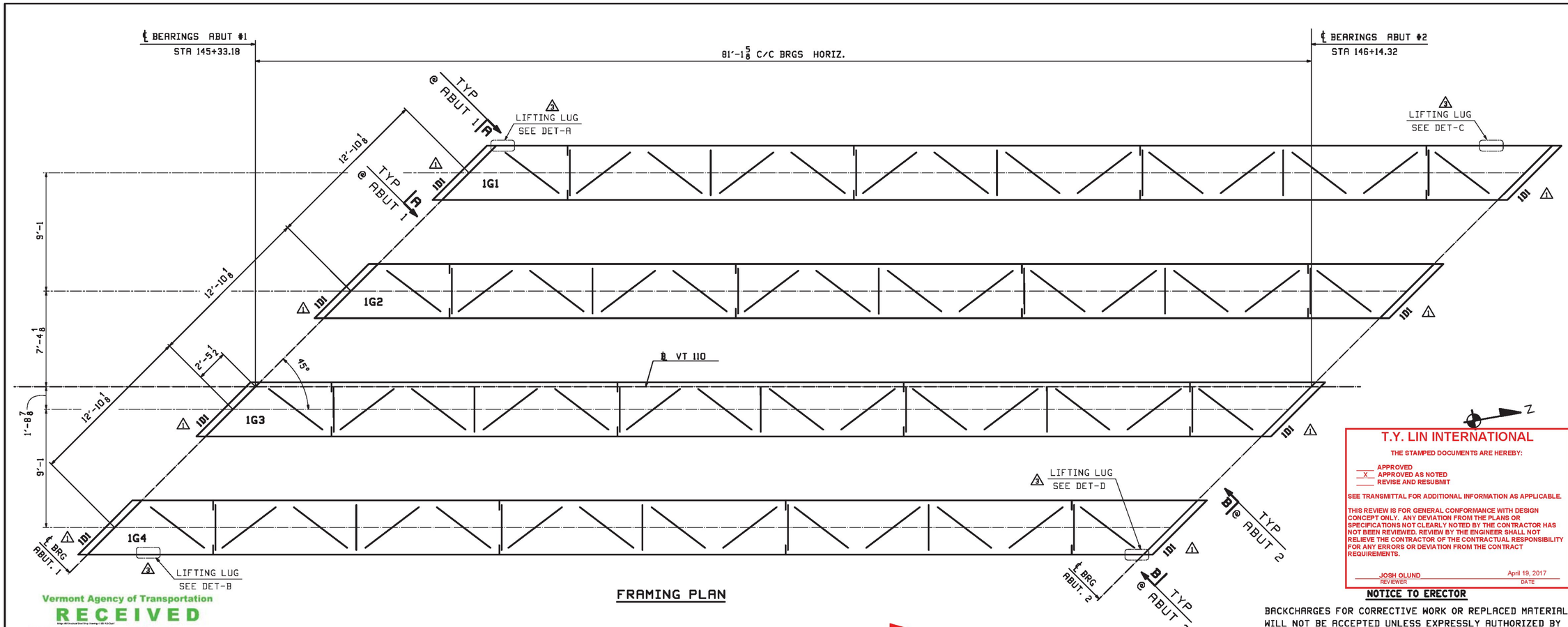

FRAMING PLAN

Vermont Agency of Transportation
RECEIVED
CK'D BY TYLin, R. Foster OK'D BY TYLin, R. Foster
April 17, 2017
RESUBMIT No Approved AsNoted
BY Kristin Higgins DATE 4/20/2017

T.Y. LIN INTERNATIONAL
THE STAMPED DOCUMENTS ARE HEREBY:
___ APPROVED
_X_ APPROVED AS NOTED
___ REVISE AND RESUBMIT
SEE TRANSMITTAL FOR ADDITIONAL INFORMATION AS APPLICABLE.
THIS REVIEW IS FOR GENERAL CONFORMANCE WITH DESIGN CONCEPT ONLY. ANY DEVIATION FROM THE PLANS OR SPECIFICATIONS NOT CLEARLY NOTED BY THE CONTRACTOR HAS NOT BEEN REVIEWED. REVIEW BY THE ENGINEER SHALL NOT RELIEVE THE CONTRACTOR OF THE CONTRACTUAL RESPONSIBILITY FOR ANY ERRORS OR DEVIATION FROM THE CONTRACT REQUIREMENTS.
JOSH OLUND April 19, 2017
REVIEWER DATE

NOTICE TO ERECTOR

BACKCHARGES FOR CORRECTIVE WORK OR REPLACED MATERIALS WILL NOT BE ACCEPTED UNLESS EXPRESSLY AUTHORIZED BY CASCO BEFORE ANY SUCH COSTS ARE INCURRED.

NOTES:

- ALL STEEL SHALL BE ERECTED WITH THE "SHIPPING MARK" IN THE SAME RELATIVE POSITION AS SHOWN ON THE ERECTION PLAN.

INDEX OF SHEETS	
GN1	GENERAL NOTES
WS1	CALCULATION PLAN
BG1	CAMBER & FLANGE DIAGRAMS
TD1	TYPICAL DETAILS
E1	FRAMING PLAN
BD1	BLOCKING DIAGRAM
X1-X3	GIRDER STANDARD DETAILS
1AD-1D	GIRDERS

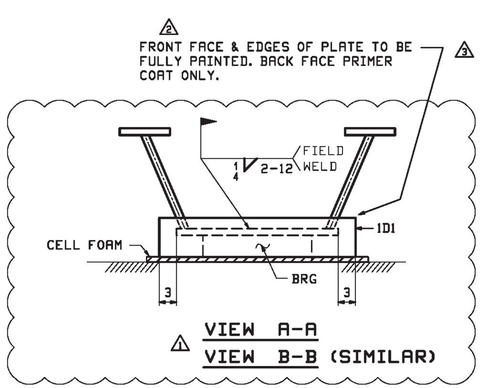

VIEW A-A
VIEW B-B (SIMILAR)

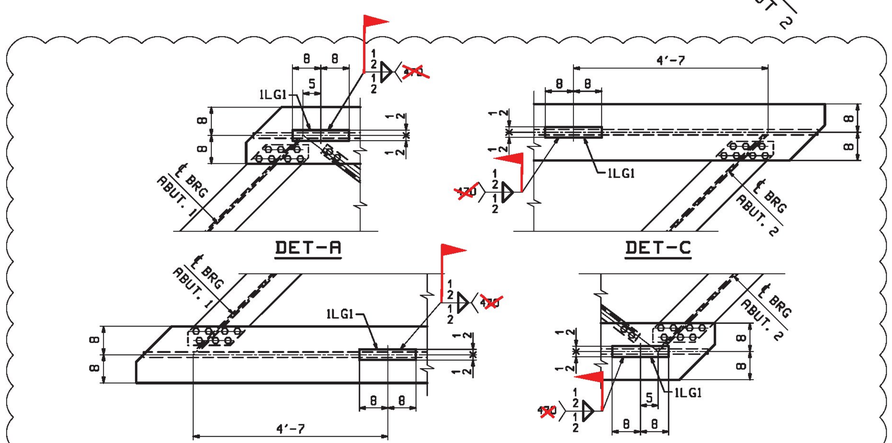

3 * CONTRACTOR TO APPLY A BOND OUT AREA AROUND THE LIFTING LUG AREA AND FIELD WELD THE LIFTING LUGS AFTER THE PBU IS CAST

REV.	DATE	REMARKS	DWN	CHK	APVL	SHOP
3	04/17	ADDED LUG DETAIL EXTRA 1	RRL	WJL		
2	03/07	REVISED PER APPROVALS	RRL	WJL		
1	02/15	ADDED RETAINING PLATE	RRL	WJL		
0						

MATERIAL:	SURFACE PREP. & PAINT:	HOLES:	SHOP BOLTS:
M270-50	SEE GN1		

DESCRIPTION: FRAMING PLAN

CASCO BAY STEEL STRUCTURES, INC.
1 WALLACE AVE. PHONE (207) 780-6722
SOUTH PORTLAND, ME 04106 FAX. (207) 780-6726
TENSOR 3435

STRUCTURE:	DRAWN:	DATE:
VT ROUTE 110 OVER 1ST BRANCH WHITE RIVER BRIDGE NO. 9	RRL	01/02
	CHKD: WJL	DATE: 01/09/17
LOCATION: TOWN OF CHELSEA, ORANGE COUNTY, VT.	JOB NO.	DWG NO.
PROJ NO. BHF 0169(9)	696	E1
CUSTOMER: CPM CONSTRUCTORS		REV. 3