NOTE: BAR COUNTS REPRESENT 1 UNIT.

WW1 REINFORCING SCHEDULE					
BAR MARK	LOCATION	TYPE	SIZE/SPACING	CUT LENGTH	# OF PCS
VERTICAL	OSF	STRAIGHT	#5 @ 12"	10'-1" TO 7'-3"	12
VERTICAL	ISF	STRAIGHT	#5 @ 12"	10'-1" TO 7'-3"	12
HORIZONTAL	OSF	STRAIGHT	#5 @ 12"	11'-7⅞"	10
HORIZONTAL	ISF	STRAIGHT	#5 @ 12"	11'-6¼"	10
DIAGONAL	FOLLOW SLOPE	STRAIGHT	#4	8'-0"	2

WW2 REINFORCING SCHEDULE					
BAR MARK	LOCATION	TYPE	SIZE/SPACING	CUT LENGTH	# OF PCS
VERTICAL	OSF	STRAIGHT	#5 @ 12"	10'-1" TO 6'-3"	9
VERTICAL	ISF	STRAIGHT	#5 @ 12"	10'-1" TO 6'-3"	9
HORIZONTAL	OSF	STRAIGHT	#5 @ 12"	8'-7⅞"	10
HORIZONTAL	ISF	STRAIGHT	#5 @ 12"	8'-6¼"	10
DIAGONAL	FOLLOW SLOPE	STRAIGHT	#4	8'-4½"	2

WW3 REINFORCING SCHEDULE					
BAR MARK	LOCATION	TYPE	SIZE/SPACING	CUT LENGTH	# OF PCS
VERTICAL	OSF	STRAIGHT	#5 @ 12"	9'-10⅝" TO 4'-0⅝"	9
VERTICAL	ISF	STRAIGHT	#5 @ 12"	9'-10⅝" TO 4'-0⅝"	9
HORIZONTAL	OSF	STRAIGHT	#5 @ 12"	8'-7⅞"	10
HORIZONTAL	ISF	STRAIGHT	#5 @ 12"	8'-6¼"	10
DIAGONAL	FOLLOW SLOPE	STRAIGHT	#4	9'-6½"	2

WW4 REINFORCING SCHEDULE					
BAR MARK	LOCATION	TYPE	SIZE/SPACING	CUT LENGTH	# OF PCS
VERTICAL	OSF	STRAIGHT	#5 @ 12"	9'-10⅝" TO 6'-1"	9
VERTICAL	ISF	STRAIGHT	#5 @ 12"	9'-10⅝" TO 6'-1"	9
HORIZONTAL	OSF	STRAIGHT	#5 @ 12"	8'-7⅞"	10
HORIZONTAL	ISF	STRAIGHT	#5 @ 12"	8'-6¼"	10
DIAGONAL	FOLLOW SLOPE	STRAIGHT	#4	8'-5"	2

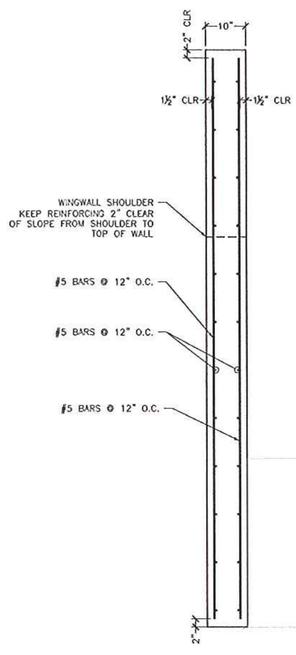

1 S5.0 WINGWALL REINFORCING (TYP)
¾" = 1'-0"

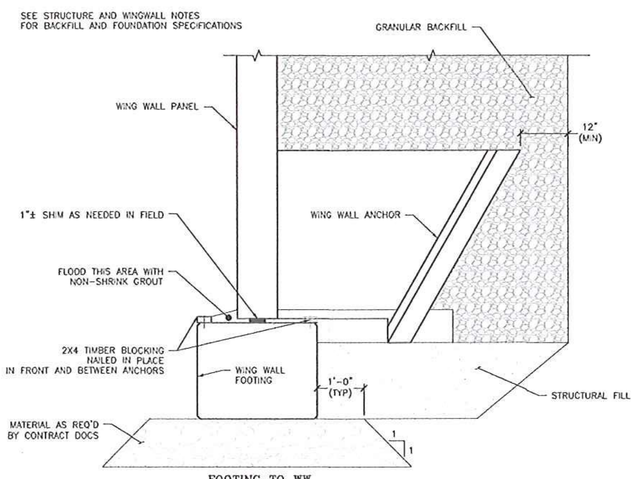

2 S5.0 FOOTING TO WW ATTACHMENT DETAIL
¾" = 1'-0"

NO EXCEPTIONS TAKEN [X] DISAPPROVED [ ]
Revise and Resubmit [ ] Approved as Noted [ ]

CHECKING IS ONLY FOR GENERAL CONFORMANCE WITH THE DESIGN CONCEPT OF THE PROJECT AND GENERAL COMPLIANCE WITH THE INFORMATION GIVEN IN THE CONTRACT DOCUMENTS. ANY ITEM SHOWN IS SUBJECT TO THE REQUIREMENTS OF THE PLANS AND SPECIFICATIONS. CONTRACTOR IS RESPONSIBLE FOR DIMENSIONS WHICH SHALL BE CONFIRMED AND CORRELATED AT THE JOB SITE. FABRICATION PROCESSES AND TECHNIQUES OF CONSTRUCTION, COORDINATION OF HIS WORK WITH THAT OF ALL OTHER TRADES, AND THE SATISFACTORY PERFORMANCE OF THE WORK.

GREEN INTERNATIONAL AFFILIATES, INC.

CHECKED BY YW DATE 8/31/15
SIGNED BY BK DATE 8/31/15

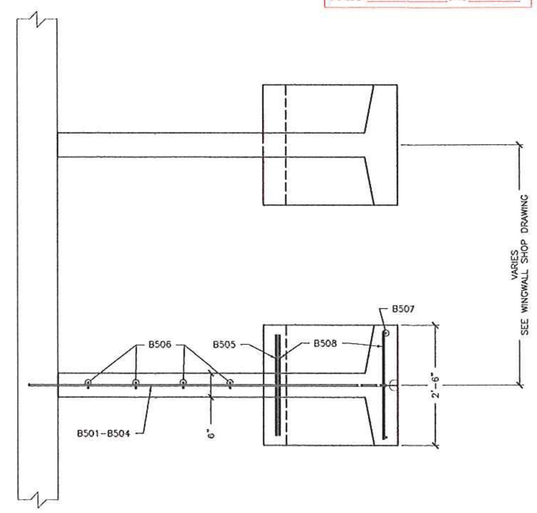

NOTE: REINFORCING SHOWN REPRESENTS "E" ANCHOR
OTHER ANCHOR REINFORCING SIMILAR

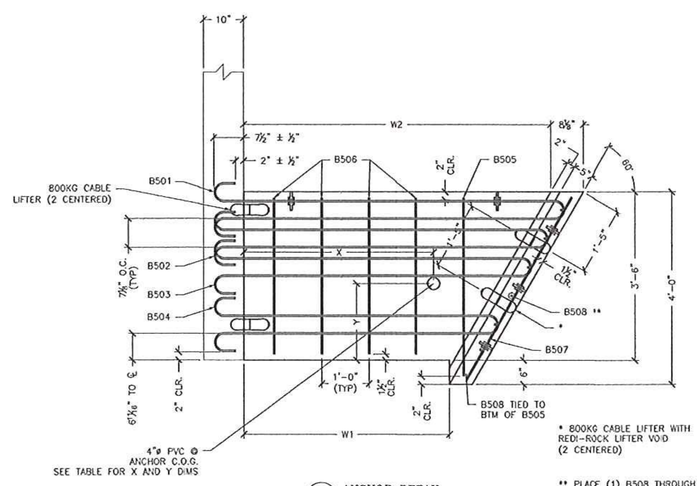

3 S5.0 ANCHOR DETAIL
¾" = 1'-0"

* 800KG CABLE LIFTER WITH
REDI-ROCK LIFTER VOID
(2 CENTERED)

** PLACE (1) B508 THROUGH EACH HOOP BARS,
(1) CENTERED BETWEEN HOOP BARS 503 & 504, AND
(2) BELOW B504 HOOP BAR W/ BOTTOM B508
2" CLEAR FROM BOTTOM (7 TOTAL)

SPECIALTY ENGINEERING SERVICES PROVIDED BY:
CONCRETE ENGINEERING SOLUTIONS, LLC

4 REQ'D

ANCHOR TYPE "B"					
CONCRETE QUANTITY				0.41 CY	
WEIGHT				1740 LB	
W1				1'-4"	
W2				3'-5⅛"	
X = 2'-2⅛"		Y= 1'-8⅜"			
BAR LIST					
MARK	QTY	SIZE	L	TYPE	LENGTH
B501	1	#5	4'-4½"	1	10'-1½"
B502	1	#5	4'-0½"	1	9'-5"
B503	1	#5	3'-8¼"	1	8'-9"
B504	1	#5	3'-0"	1	7'-4½"
B505	2	#5	3'-8½"	2	4'-7"
B506	2	#5	----	Str.	3'-3"
B507	4	#5	----	Str.	4'-4½"
B508	7	#5	----	Str.	2'-3"

4 REQ'D

ANCHOR TYPE "C"					
CONCRETE QUANTITY				0.48 CY	
WEIGHT				2010 LB	
W1				2'-4"	
W2				4'-5⅛"	
X = 2'-8¾"		Y= 1'-6½"			
BAR LIST					
MARK	QTY	SIZE	L	TYPE	LENGTH
B501	1	#5	5'-4½"	1	12'-1½"
B502	1	#5	5'-0½"	1	11'-5"
B503	1	#5	4'-8¼"	1	10'-9"
B504	1	#5	4'-0"	1	9'-4½"
B505	2	#5	3'-8½"	2	4'-7"
B506	4	#5	----	Str.	3'-3"
B507	4	#5	----	Str.	4'-4½"
B508	7	#5	----	Str.	2'-3"

ANCHOR TYPE "D"					
CONCRETE QUANTITY				0.54 CY	
WEIGHT				2285 LB	
W1				3'-4"	
W2				5'-5⅛"	
X = 3'-5⅛"		Y= 1'-8½"			
BAR LIST					
MARK	QTY	SIZE	L	TYPE	LENGTH
B501	1	#5	6'-4½"	1	14'-1½"
B502	1	#5	6'-0½"	1	13'-5"
B503	1	#5	5'-8¼"	1	12'-9"
B504	1	#5	5'-0"	1	11'-4½"
B505	2	#5	3'-8½"	2	4'-7"
B506	6	#5	----	Str.	3'-3"
B507	4	#5	----	Str.	4'-4½"
B508	7	#5	----	Str.	2'-3"

ANCHOR TYPE "E"					
CONCRETE QUANTITY				0.61 CY	
WEIGHT				2550 LB	
W1				4'-4"	
W2				6'-5⅛"	
X = 4'-0"		Y= 1'-6⅝"			
BAR LIST					
MARK	QTY	SIZE	L	TYPE	LENGTH
B501	1	#5	7'-4½"	1	16'-1½"
B502	1	#5	7'-0½"	1	15'-5"
B503	1	#5	6'-8¼"	1	14'-9"
B504	1	#5	6'-0"	1	13'-4½"
B505	2	#5	3'-8½"	2	4'-7"
B506	8	#5	----	Str.	3'-3"
B507	4	#5	----	Str.	4'-4½"
B508	7	#5	----	Str.	2'-3"

ANCHOR TYPE "F"					
CONCRETE QUANTITY				0.68 CY	
WEIGHT				2860 LB	
W1				5'-4"	
W2				7'-5⅛"	
X = 4'-7⅞"		Y= 1'-8⅝"			
BAR LIST					
MARK	QTY	SIZE	L	TYPE	LENGTH
B501	1	#5	8'-4½"	1	18'-1½"
B502	1	#5	8'-0½"	1	17'-5"
B503	1	#5	7'-8¼"	1	16'-9"
B504	1	#5	7'-0"	1	15'-4½"
B505	2	#5	3'-8½"	2	4'-7"
B506	10	#5	----	Str.	3'-3"
B507	4	#5	----	Str.	4'-4½"
B508	7	#5	----	Str.	2'-3"

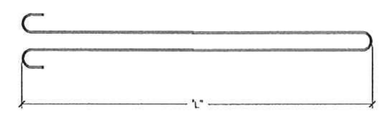

TYPE 1

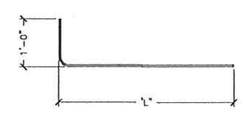

TYPE 2

No.	Date	Revisions	By
1	8/25/2015	Revised per FOR comments	PJL

STATE OF VERMONT
STUART D. GORMAN
NO 8444
CIVIL
LICENSED
PROFESSIONAL ENGINEER
8/26/15

MICHE CONSULTANTS
173 BURTON INDUSTRIAL DRIVE - PO BOX 870
HENNIKER, NH 03242
PHONE: 603-428-3218
FAX: 603-428-3220
WWW.MICHECORP.COM

VAOT #ER STP 013-2(12) - VT Route 100 Bridge #82
Jamaica, VT

10'x7' Box Culvert - Anchor Wingwall Details

Project No. 6200
Date: 7/23/2015
Designed by: xxx
Drawn by: CTP
Checked by: PJL
Scale: AS SHOWN

Prepared for:
Casella Construction
8 US4 East
Mendon VT 05701

DWG NO.
S5.0