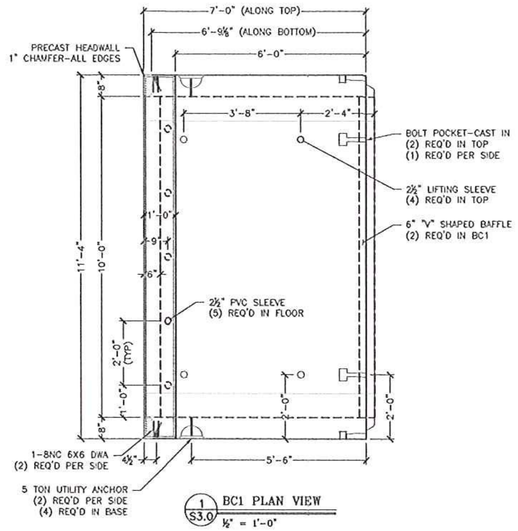

1 S3.0 BC1 PLAN VIEW
½" = 1'-0"

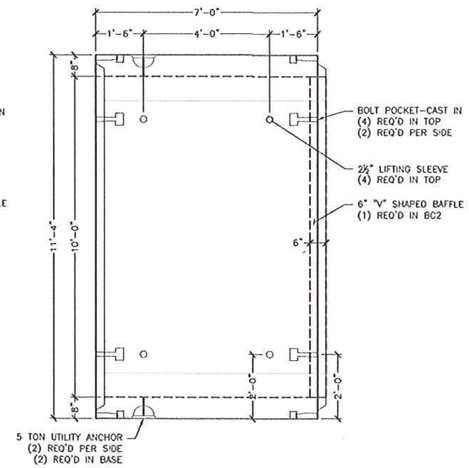

2 S3.0 BC2 PLAN VIEW
½" = 1'-0"

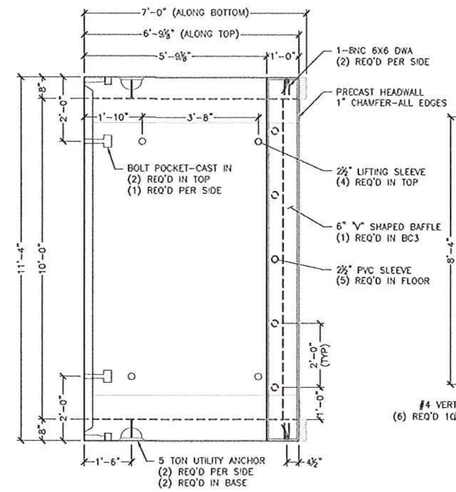

3 S3.0 BC3 PLAN VIEW
½" = 1'-0"

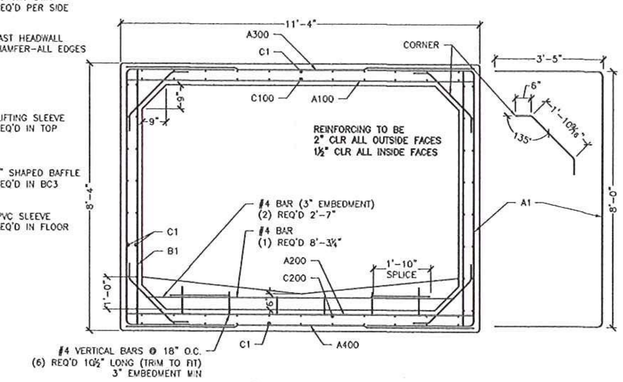

7 S3.0 REINFORCING SECTION
½" = 1'-0"

BC1 - 1 REQ'D

ITEM NUMBER: 281000
UNIT WEIGHT AND VOLUME:
BC: 6.51CY (27,340#)
HW: .99CY (4,200#)
BAFFLE WALL: .13CY (550#)
TOTAL WEIGHT: 32,730#

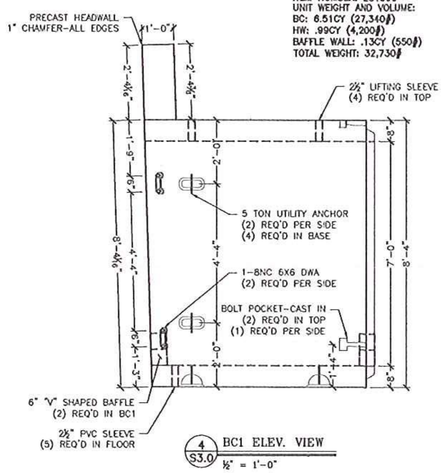

4 S3.0 BC1 ELEV. VIEW
½" = 1'-0"

BC2 - 7 REQ'D

ITEM NUMBER: 281000
UNIT WEIGHT AND VOLUME:
BC: 6.62CY (27,800#)
BAFFLE WALL: .13CY (550#)
TOATL WEIGHT: 28,350#

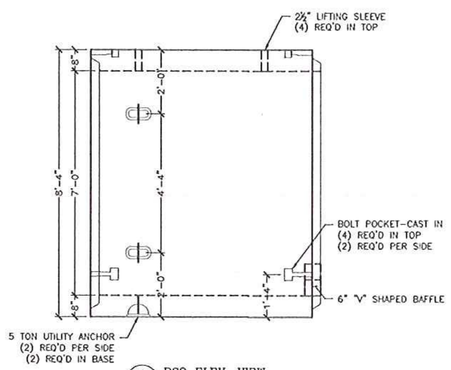

5 S3.0 BC2 ELEV. VIEW
½" = 1'-0"

BC3 - 1 REQ'D

ITEM NUMBER: 281000
UNIT WEIGHT AND VOLUME:
BC: 6.51CY (27,340#)
HW: .88CY (3,700#)
BAFFLE WALL: .13CY (550#)
TOTAL WEIGHT: 31,590#

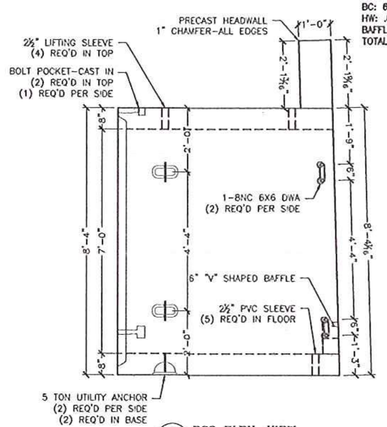

6 S3.0 BC3 ELEV. VIEW
½" = 1'-0"

BC REINFORCING SCHEDULE (COUNTS REFLECT 1 UNIT)						
LOCATION	MARK	QTY	SIZE	SPACING	TYPE	CUT LENGTH
TOP SLAB (INT)	A100	14	#5	6"	STRAIGHT	11'-0"
BOT. SLAB (INT)	A200	14	#5	6"	STRAIGHT	11'-0"
TOP SLAB (EXT)	A300	7	#4	12"	STRAIGHT	11'-0"
BOT. SLAB (EXT)	A400	7	#4	12"	STRAIGHT	11'-0"
WALL (EXT)	A1	28	#5	6"	"U" BARS	14'-7½"
WALL (INT)	B1	14	#4	12"	STRAIGHT	8'-0"
LONGIT. TOP (EXT)	C1	13	#4	12"	STRAIGHT	6'-8"
LONGIT. TOP (INT)	C100	11	#4	12"	STRAIGHT	*6'-8"
LONGIT. BOT. (INT)	C200	11	#4	12"	STRAIGHT	*6'-8"
LONGIT. BOT (EXT)	C1	11	#4	12"	STRAIGHT	6'-8"
LONGIT. WALL (EXT)	C1	16	#4	12"	STRAIGHT	6'-8"
LONGIT. WALL (INT)	C1	16	#4	12"	STRAIGHT	*6'-8"
CORNER BARS	CORNER	7/CORNER	#4	12"	STRAIGHT	2'-10½"
TOP DECK	DBS1	7/13	#4	12" ISF 24" OSF	"L" BARS	**2'-0"
HEADWALL	DBI1	20	#4	--	STRAIGHT	**2'-0" BC3 2'-2" BC1
HEADWALL	CWH1	6	#4	AS SHOWN	STRAIGHT	**13'-0"

REINFORCING NOTE:
SKEW LAST BARS TO FOLLOW SLOPE IN BC1 AND BC3

* ADD 3" FOR BC1
SUBTRACT 3" FOR BC3

** REINFORCING REQUIRED IN BC1/BC3 ONLY

REINFORCING NOTE:
ALL HEADWALL REINFORCING TO BE EPOXY COATED

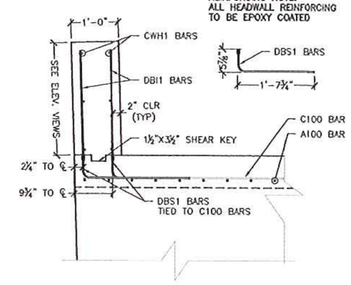

8 S3.0 HEADWALL REINFORCING SECTION
¾" = 1'-0"

NO EXCEPTIONS TAKEN ☒ DISAPPROVED ☐
Revise and Resubmit ☐ Approved as Noted ☐

CHECKING IS ONLY FOR GENERAL CONFORMANCE WITH THE DESIGN CONCEPT OF THE PROJECT AND GENERAL COMPLIANCE WITH THE INFORMATION GIVEN IN THE CONTRACT DOCUMENTS. ANY ACTION SHOWN IS SUBJECT TO THE REQUIREMENTS OF THE PLANS AND SPECIFICATIONS. CONTRACTOR IS RESPONSIBLE FOR DIMENSIONS WHICH SHALL BE CONFIRMED AND CORRELATED AT THE JOB SITE, FABRICATION PROCESSES AND TECHNIQUES OF CONSTRUCTION, COORDINATION OF HIS WORK WITH THAT OF ALL OTHER TRADES, AND THE SATISFACTORY PERFORMANCE OF THE WORK.

GREEN INTERNATIONAL AFFILIATES, INC.

CHECKED BY YW DATE 8/31/15
SIGNED BY BK DATE 8/31/15

SPECIALTY ENGINEERING SERVICES PROVIDED BY:
CONCRETE ENGINEERING SOLUTIONS, LLC

No.	Date	Revisions	By
1	9/25/2015	Revised per FHWA comments	PJL

STATE OF VERMONT
ROBERT D. GORHAM III
NO 84443
CIVIL
LICENSED PROFESSIONAL ENGINEER
8/26/15

MACHIE CORPORATION
173 BURTON INDUSTRIAL DRIVE - PO BOX 870
HENNIKER, NH 03242
PHONE: 603-428-3218
FAX: 603-428-3235
WWW.MACHIECORP.COM

VAOT #ER STP 013-2(12) - VT Route 100 Bridge #82
Jamaica, VT
10'x7' Box Culvert - Culvert Details

Project No. 6200
Date: 7/22/2015
Designed by: xxx
Drawn by: CTP
Checked by: PJL
Scale: AS SHOWN

Prepared for:
Casella Construction
8 US4 East
Mendon VT 05701

DWG NO.
S3.0