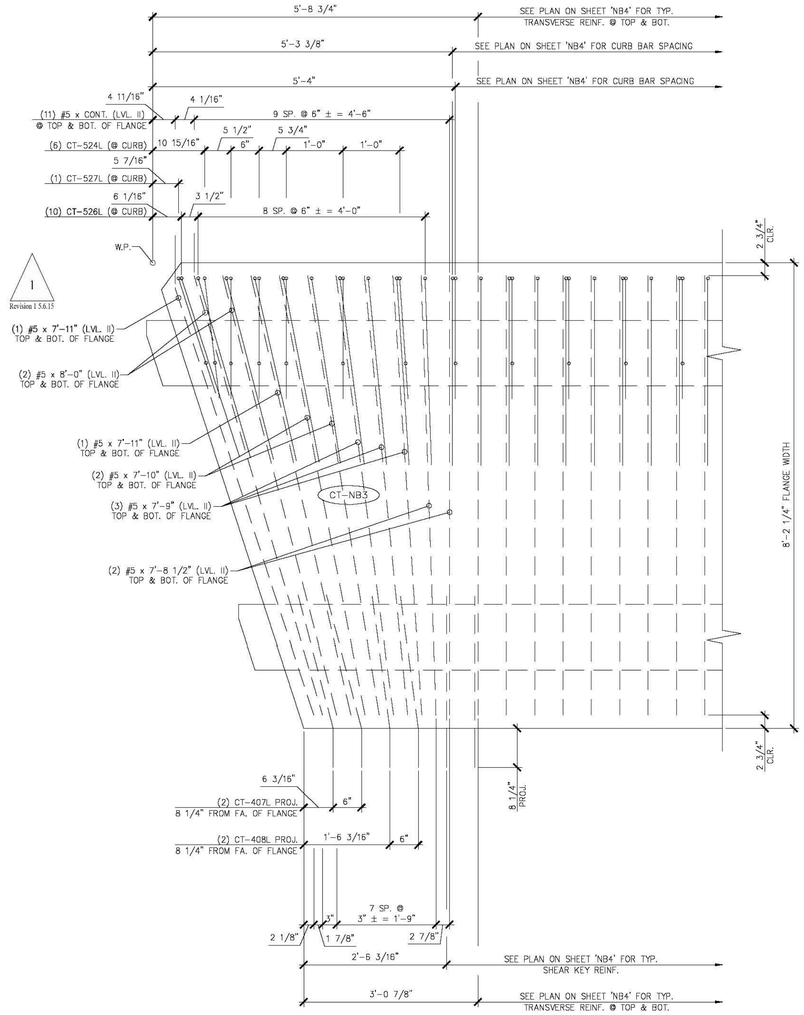

A NB4.1 BEAM END TRANSVERSE/SHEAR KEY/CURB REINFORCING

3/4" = 1'-0"

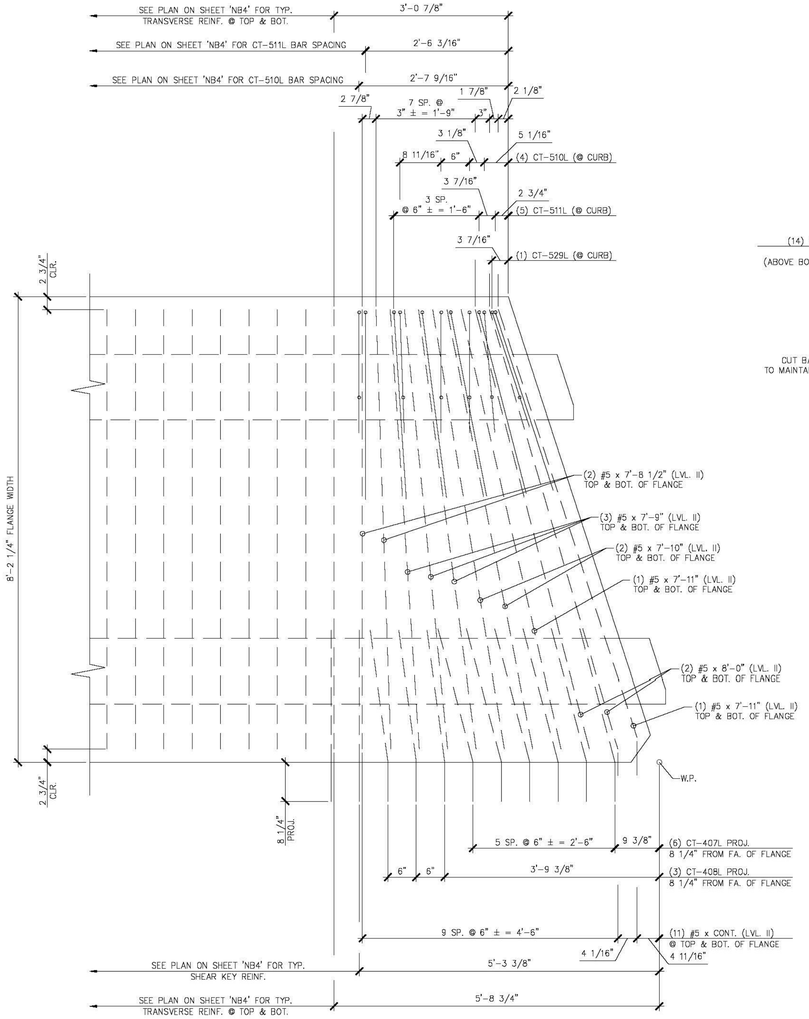

B NB4.1 BEAM END TRANSVERSE/SHEAR KEY/CURB REINFORCING

3/4" = 1'-0"

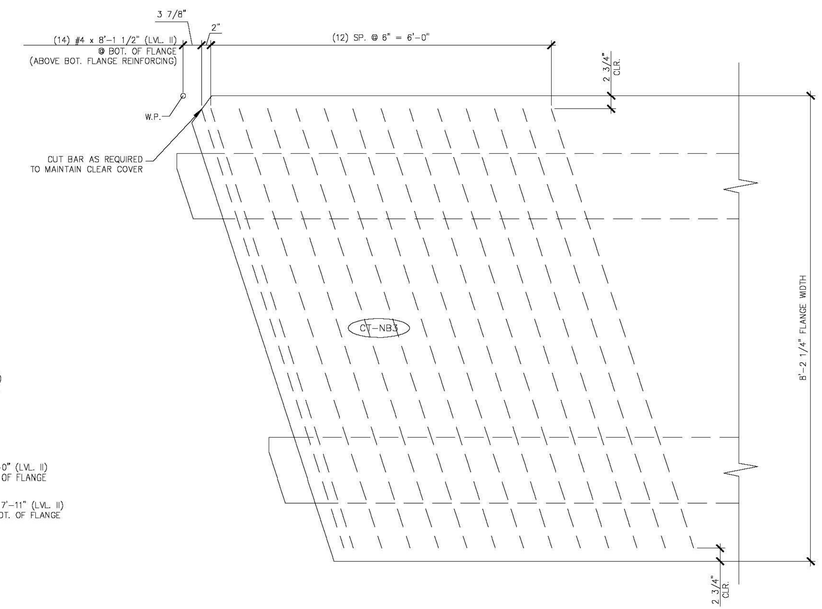

C NB4.1 ADDITIONAL TRANSVERSE REINFORCING AT BOTTOM OF FLANGE

3/4" = 1'-0"

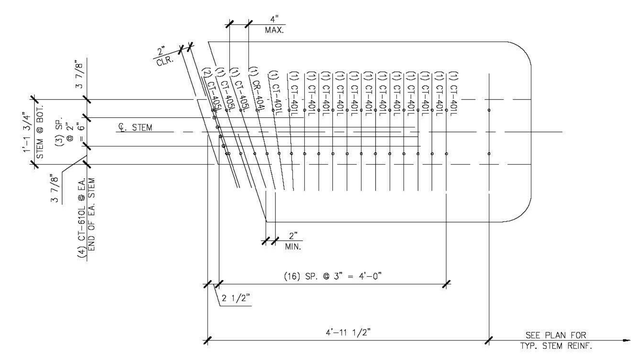

D NB4.1 BEAM END STEM REINFORCING

3/4" = 1'-0"

Vermont Agency of Transportation

RECEIVED

ON: May 26, 2015

and Checked for

CONFORMANCE

BY: Jennifer Fitch DATE: 05/28/2015

1
Revision 1.5.6.15

SHOP DRAWING REVIEW

☒ REVIEWED AS REQUIRED BY THE CONSTRUCTION CONTRACT DOCUMENTS AND APPROVED, BUT ONLY FOR CONFORMANCE TO THE DESIGN CONCEPT OF THE WORK, AND SUBJECT TO FURTHER LIMITATIONS AND REQUIREMENTS CONTAINED IN THE CONSTRUCTION CONTRACT DOCUMENTS.

☐ REJECTED ☐ REVISE AND RESUBMIT ☐ FURNISH AS CORRECTED

CORRECTIONS OR COMMENTS MADE ON THE SHOP DRAWINGS DURING THIS REVIEW DO NOT RELIEVE CONTRACTOR FROM COMPLIANCE WITH REQUIREMENTS OF THE DRAWINGS AND SPECIFICATIONS. THIS CHECK IS ONLY FOR REVIEW OF GENERAL CONFORMANCE WITH THE DESIGN CONCEPT OF THE PROJECT AND GENERAL COMPLIANCE WITH THE INFORMATION GIVEN IN THE CONTRACT DOCUMENTS. THE CONTRACTOR IS RESPONSIBLE FOR: CONFIRMING AND CORRELATING ALL QUANTITIES AND DIMENSIONS; SELECTING FABRICATION PROCESSES AND TECHNIQUES OF CONSTRUCTION; COORDINATING HIS WORK WITH THAT OF ALL OTHER TRADES; AND PERFORMING HIS WORK IN A SAFE AND SATISFACTORY MANNER.

vhb
40 IDX Drive
Building 100, Suite 200
South Burlington, VT 05403
802.497.6100

Job Number: 57632.00
Reviewed By: E.F. LAWES
Date: May 27, 2015

J.P. CARRARA & SONS INC.
Precast & Prestress Manufacturer
2464 CASE STR., MIDDLEBURY, VERMONT 05753 Phone:(802)388-6351 Fax:(802)388-9010

SCHULTZ CONSTRUCTION
CONTRACTOR
BALLSTON SPA, NY

STATE OF VERMONT AGENCY OF TRANSPORTATION COUNTY OF RUTLAND	DATE: MAY 06, 2015	
	SCALE: NOTED	
TOWN OF CASTLETON VT ROUTE 30 (RURAL MINOR ARTERIAL) BRIDGE NO.: 93 PROJECT NO.: BRF 015-2(10)	CHKD: R.M.	DFTM: PSS
	JOB NO: 23456-015	
PRESTRESSED NEXT BEAM DETAILS "CT-NB3"	DWG. NO: NB4.1	