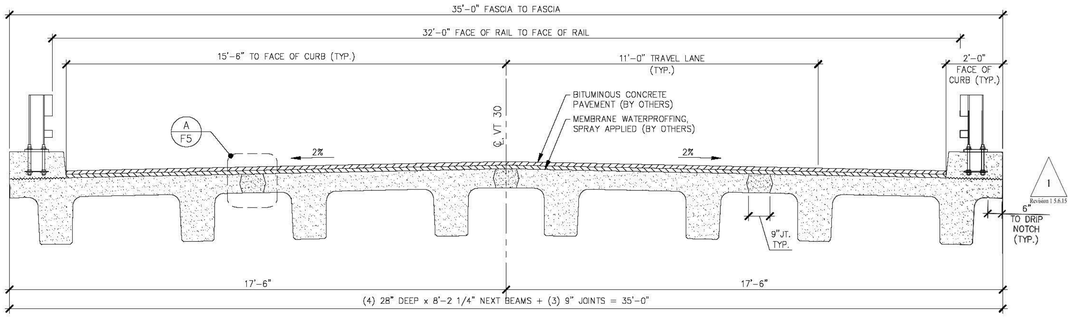

1 F5 TRANSVERSE NEXT BEAM SECTION

3/8" = 1'-0"

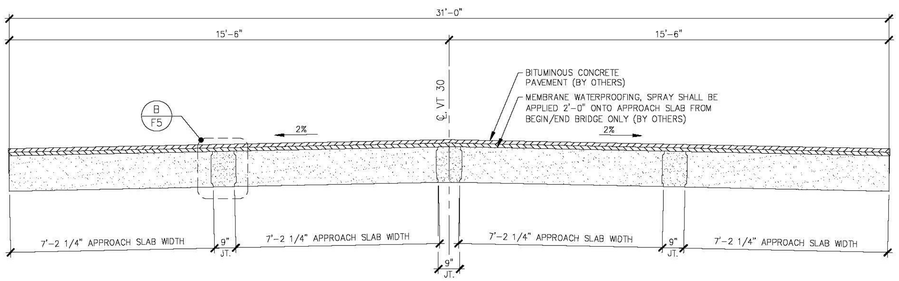

2 F5 TRANSVERSE APPROACH SLAB SECTION

3/8" = 1'-0"

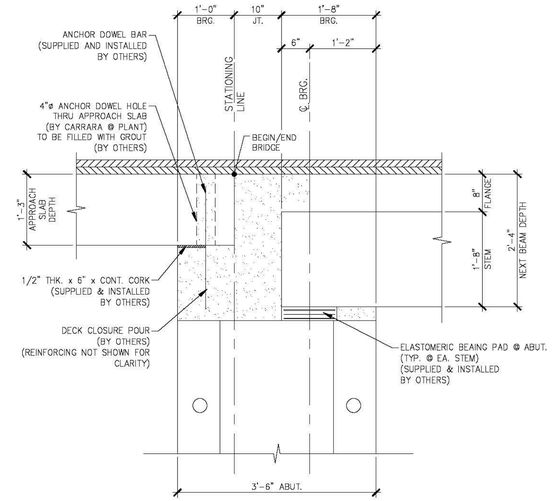

C F5 BEARING SECTION

3/4" = 1'-0"

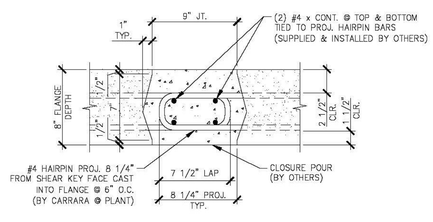

A F5 NEXT BEAM CLOSURE POUR

1 1/2" = 1'-0"

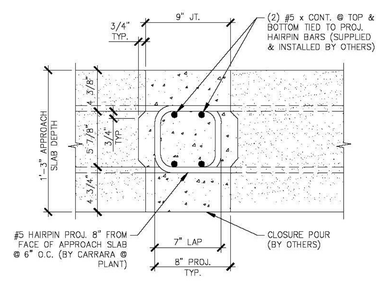

B F5 APPROACH SLAB CLOSURE POUR

1 1/2" = 1'-0"

1 Revision 1.5.6.15

SHOP DRAWING REVIEW

X REVIEWED AS REQUIRED BY THE CONSTRUCTION CONTRACT DOCUMENTS AND APPROVED, BUT ONLY FOR CONFORMANCE TO THE DESIGN CONCEPT OF THE WORK, AND SUBJECT TO FURTHER LIMITATIONS AND REQUIREMENTS CONTAINED IN THE CONSTRUCTION CONTRACT DOCUMENTS.

☐ REJECTED ☐ REVISE AND RESUBMIT ☐ FURNISH AS CORRECTED

CORRECTIONS OR COMMENTS MADE ON THE SHOP DRAWINGS DURING THIS REVIEW DO NOT RELIEVE CONTRACTOR FROM COMPLIANCE WITH REQUIREMENTS OF THE DRAWINGS AND SPECIFICATIONS. THIS CHECK IS ONLY FOR REVIEW OF GENERAL CONFORMANCE WITH THE DESIGN CONCEPT OF THE PROJECT AND GENERAL COMPLIANCE WITH THE INFORMATION GIVEN IN THE CONTRACT DOCUMENTS. THE CONTRACTOR IS RESPONSIBLE FOR: CONFIRMING AND CORRELATING ALL QUANTITIES AND DIMENSIONS; SELECTING FABRICATION PROCESSES AND TECHNIQUES OF CONSTRUCTION; COORDINATING HIS WORK WITH THAT OF ALL OTHER TRADES; AND PERFORMING HIS WORK IN A SAFE AND SATISFACTORY MANNER.

vhb 40 IDX Drive Building 100, Suite 200 South Burlington, VT 05403 802.497.6100

Job Number: 57632.00
Reviewed By: E.F. LAWES
Date: May 27, 2015

Vermont Agency of Transportation
Certified EMF01002Rev01.pdf
RECEIVED
ON: May 26, 2015
and Checked for
CONFORMANCE
BY: Jennifer Fitch DATE: 05/28/2015

J.P. CARRARA & SONS INC.
Precast & Prestress Manufacturer
2464 CASE STR., MIDDLEBURY, VERMONT 05753 Phone:(802)388-6361 Fax:(802)388-9010

SCHULTZ CONSTRUCTION
CONTRACTOR
BALLSTON SPA, NY

STATE OF VERMONT AGENCY OF TRANSPORTATION
COUNTY OF RUTLAND

TOWN OF CASTLETON
VT ROUTE 30 (RURAL MINOR ARTERIAL)
BRIDGE NO.: 93 PROJECT NO.: BRF 015-2(10)

TRANSVERSE SECTION & DETAILS

DATE:	MAY 06, 2015
SCALE:	NOTED
CHKD: R.M.	DFTM: PSS
JOB NO:	23456-015
DWG. NO:	F5