ASSEMBLY
06

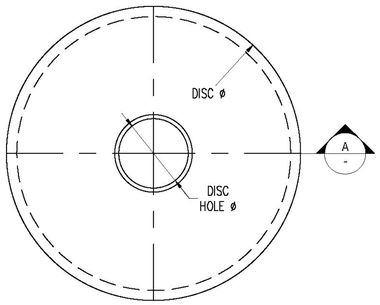

URETHANE DISC PLAN

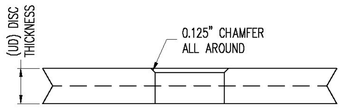

SECTION 'A'

NOTE: THE DISC SHALL BE INSTALLED WITH THE CHAMFER ON THE SHEAR PIN HOLE FACING UP

URETHANE DISC SCHEDULE (DM)						
ASSEM MK	PIECE MK	QTY	UD	DISC ø	DISC HOLE ø	DISC MATERIAL
6A	6ud1	2	1.125	10.625	1.750	POLYETHER URETHANE

PTFE DISC SCHEDULE (DM)				
ASSEM MK	PIECE MK	QTY	PTFE DIMENSIONS	PTFE DISC MATERIAL
6A	6pf1	2	0.188 X 11.750ø	PURE VIRGIN UNFILLED

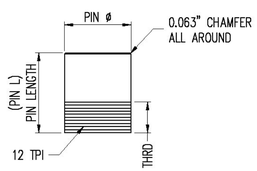

PIN DETAIL

SHEAR PIN SCHEDULE (DM)						
ASSEM MK	PIECE MK	QTY	PIN ø	PIN L	THRD	PIN MATERIAL
6A	6pn1	2	1.625	2.438	1.000	AISI 4000 SERIES; Fy = 95 ksi (min), Fu = 115 ksi (min)

SEE SHT. 06 FOR ASSEMBLY DETAILS & DESIGN INFORMATION.
SEE SHT. 08, 09, & 10 FOR ADDITIONAL SUB-ASSEMBLY DETAILS.
ALL DIMENSIONS IN INCHES UNLESS OTHERWISE NOTED

REV.	DESCRIPTION	DATE	DET.	CKD.

Vermont Agency of Transportation
RECEIVED
Morristown BRS 0240(3)S Disc Bearing Submittal_Rev 2_Approved 12.8.17.pdf

CK'D BY CLC OK'D BY CWC

December 1, 2017

RESUBMIT NO Approved

BY C. CARLSON DATE 12/08/17

D.S. BROWN
A GIBRALTAR INDUSTRIES COMPANY
THE D.S. BROWN COMPANY
300 E. CHERRY STREET
NORTH BALTIMORE, OHIO 45872
419.257.3561
FAX: 419.257.0332
WWW.DSBROWN.COM

LOCATION — VT RTE 15A MAJOR COLLECTOR
BRIDGE — NO. 1
PROJECT — BRS 0240(3)S & STP HES 030-2(28)
PROJECT NAME — MORRISTOWN
P.O. NO. — K1619
DESIGNER — T.Y. LIN INTERNATIONAL
CUSTOMER — WINTERSET, INC.

ITEM	QUANTITY
–	–
–	–
–	–
–	–
–	–
–	–
–	–
–	–
–	–

DESCRIPTION: DM MULTI-DIRECTIONA HLMR SUB-ASSEMBLY DETAILS
LAMOILLE CO., VT

SCALE:	DRAWN BY:	CHECKED BY:	DATE:	
N.T.S.	DA	KTG	11/17	–

PROJECT NUMBER	PROJECT CODE	RELEASE	SHEET
53146	1114	1	07