ASSEMBLY
01

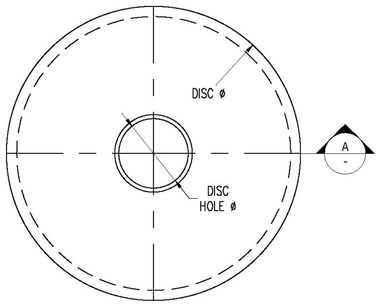

URETHANE DISC PLAN

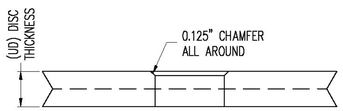

SECTION 'A'

NOTE: THE DISC SHALL BE INSTALLED WITH THE CHAMFER ON THE SHEAR PIN HOLE FACING UP

URETHANE DISC SCHEDULE (DF)						
ASSEM MK	PIECE MK	QTY	UD	DISC ø	DISC HOLE ø	DISC MATERIAL
1A	1ud1	3	1.188	11.250	2.625	POLYETHER URETHANE

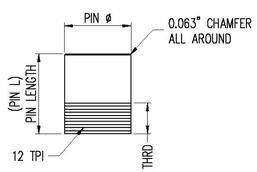

PIN DETAIL

SHEAR PIN SCHEDULE (DF)						
ASSEM MK	PIECE MK	QTY	PIN ø	PIN L	THRD	PIN MATERIAL
1A	1pn1	3	2.500	3.125	1.250	AISI 4000 SERIES; Fy = 95 ksi (min), Fu = 115 ksi (min)

SEE SHT. 01 ASSEMBLY DETAILS & DESIGN INFORMATION.
SEE SHT. 03, 04, & 05 FOR SUB-ASSEMBLY DETAILS.
ALL DIMENSIONS IN INCHES UNLESS OTHERWISE NOTED

Vermont Agency of Transportation
RECEIVED
Morristown BRS 0240(3)S Disc Bearing Submittal_Rev 2_Approved 12.8.17.pdf

CK'D BY CLC OK'D BY CWC

December 1, 2017

RESUBMIT NO Approved

BY C. CARLSON DATE 12/08/17

REV.	DESCRIPTION	DATE	DET.	CKD.

D.S. BROWN
A GIBRALTAR INDUSTRIES COMPANY
THE D.S. BROWN COMPANY
300 E. CHERRY STREET
NORTH BALTIMORE, OHIO 45872
419.257.3561
FAX: 419.257.0332
WWW.DSBROWN.COM

LOCATION — VT RTE 15A MAJOR COLLECTOR
BRIDGE — NO. 1
PROJECT — BRS 0240(3)S & STP HES 030-2(28)
PROJECT NAME — MORRISTOWN
P.O. NO. — K1619
DESIGNER — T.Y. LIN INTERNATIONAL
CUSTOMER — WINTERSET, INC.

ITEM	QUANTITY
–	–
–	–
–	–
–	–
–	–
–	–
–	–
–	–
–	–

DESCRIPTION: DF FIXED HLMR SUB-ASSEMBLY DETAILS
LAMOILLE CO., VT

SCALE:	DRAWN BY:	CHECKED BY:	DATE:	
N.T.S.	DA	KTG	11/17	–

PROJECT NUMBER	PRODUCT CODE	RELEASE	SHEET
53146	1114	1	02