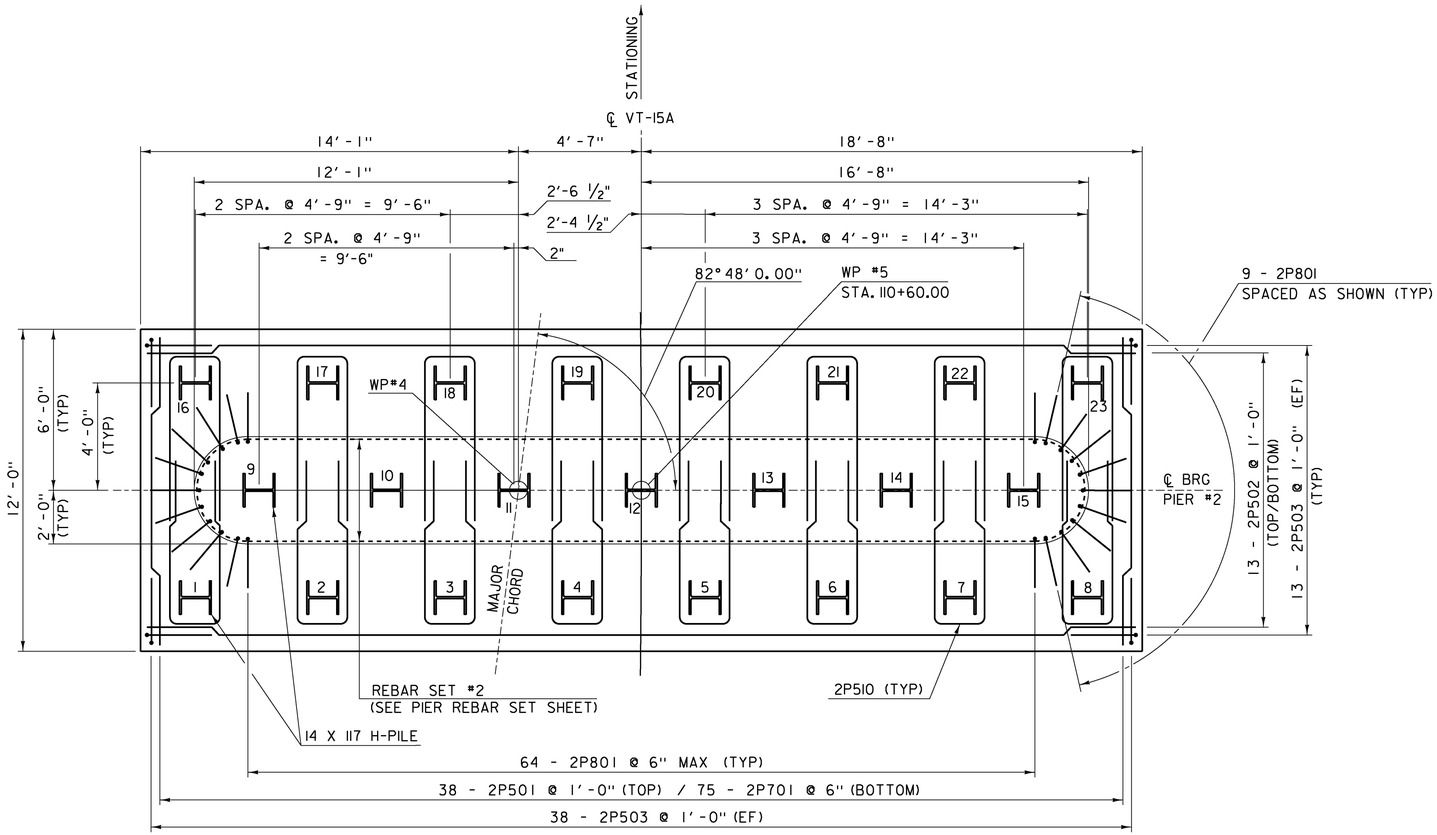

PIER #2 PILE CAP PLAN

SCALE 3/8" = 1'-0"

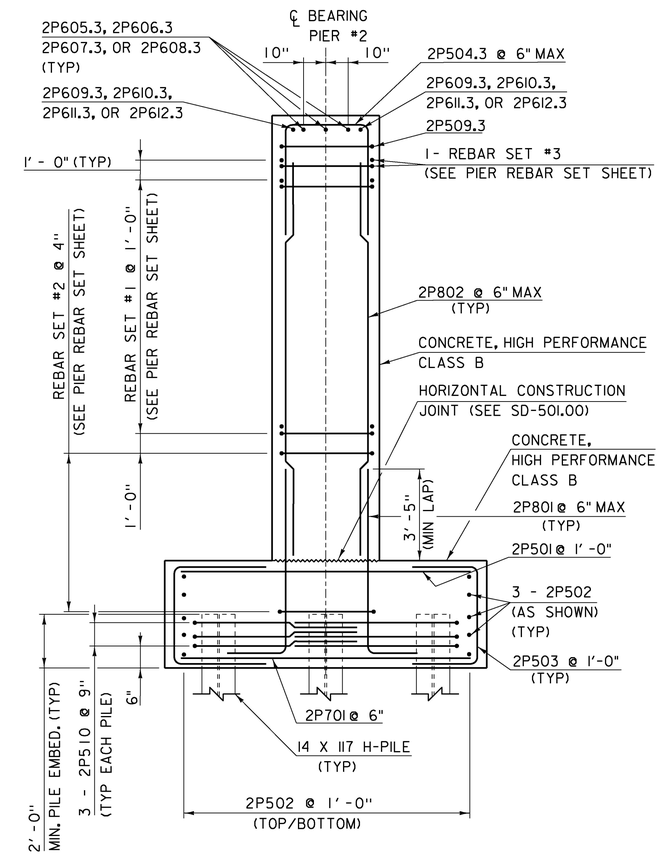

PIER #2 TYPICAL SECTION

SCALE 3/8" = 1'-0"

NOTES:

NF = NEAR FACE
FF = FAR FACE
EF = EACH FACE
▲ = CUT TO FIT IN FIELD
4" CLEAR, UNLESS OTHERWISE SPECIFIED ON THE PLANS.
2'-1" BAR LAP UNLESS OTHERWISE SPECIFIED ON THE PLANS.

STATE OF VERMONT
JOSHUA K. OLUND
NO. 72818
Structural Part II
LICENSED
PROFESSIONAL ENGINEER
3/10/17

T·Y·LIN INTERNATIONAL

PROJECT NAME: MORRISTOWN	
PROJECT NUMBER: BRS 0240(3)S/STP HES 030-2(28)	
FILE NAME: s78f329sub.dgn	PLOT DATE: 12-APR-2017
PROJECT LEADER: C. CARLSON	DRAWN BY: G. ROKES
DESIGNED BY: D. MYERS	CHECKED BY: J. OLUND
PIER #2 PILE CAP AND TYPICAL	SHEET 94 OF 175