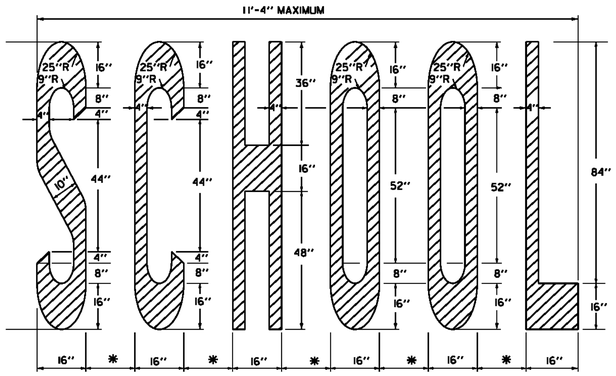

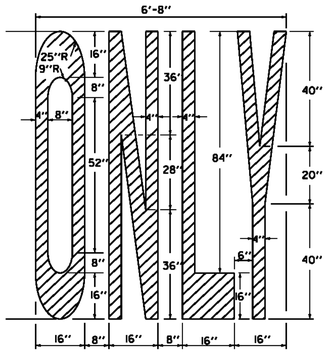

* (4"-8") - ADJUST TO AVAILABLE PAVEMENT WIDTH

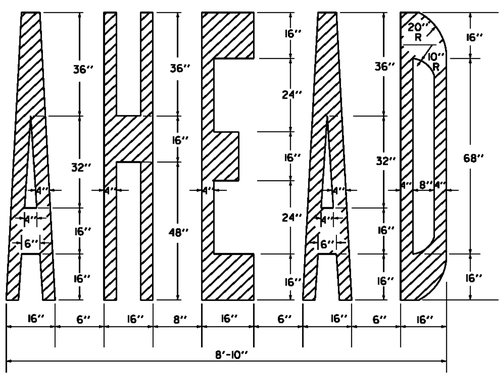

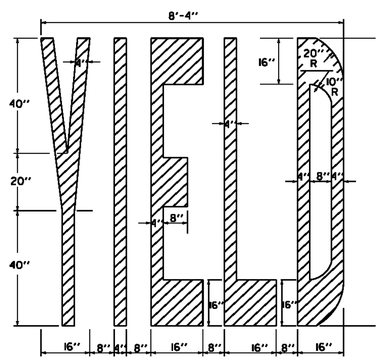

THE LETTER "G" PERTAINS TO THE WORD "SIGNAL" FOR OTHER LETTERS, SEE ABOVE.

LETTER HEIGHT

DIMENSIONS ARE FOR 8' - 4" LETTER HEIGHTS. A LESSER HEIGHT OF 8' - 0" IS ACCEPTABLE AS LONG AS THE DIMENSIONS ARE PROPORTIONAL TO THE DETAILS SHOWN SEE NOTE BELOW.

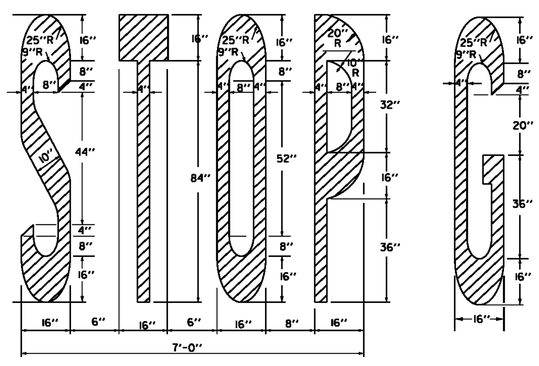

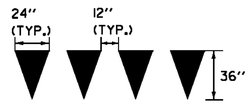

YIELD LINE DETAILS

ARROWS AND WORD MARKINGS THAT CONFORM TO THE DIMENSIONS SHOWN ON THIS SHEET OR AS DETAILED IN THE BOOKLET ENTITLED "STANDARD ALPHABETS FOR HIGHWAY SIGNS AND PAVEMENT MARKINGS " AND THE "MANUAL ON UNIFORM TRAFFIC CONTROL DEVICES" (CURRENT EDITION) PREPARED BY THE FEDERAL HIGHWAY ADMINISTRATION WILL BE ACCEPTABLE.

LETTER IN WORD MARKING AND YIELD LINE DETAILS

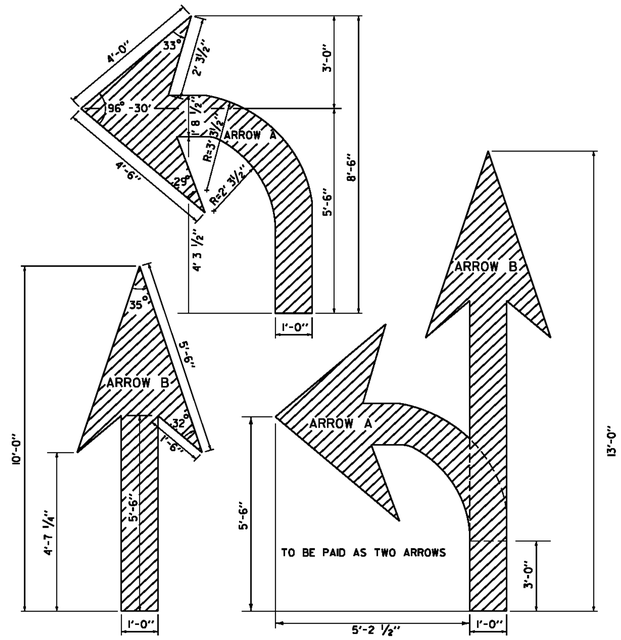

ARROW DETAILS

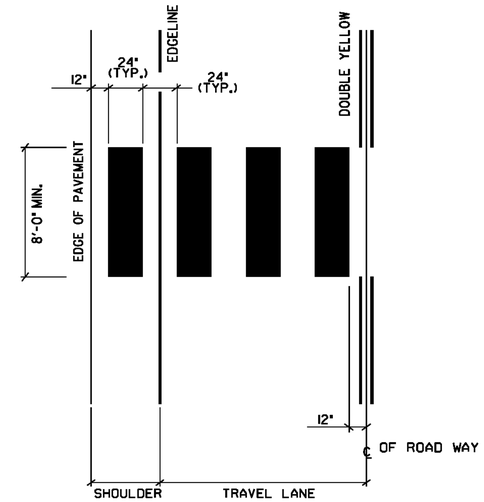

ADJUST SPACING (1 - 2 FT) TO AVOID WHEEL PATHS

BLOCK PATTERN CROSSWALK DETAIL

NOTES:

THE BLOCK PATTERN IS THE VTRANS PREFERED CROSSWALK MARKINGS. SEE MUTCD FOR APPROVED OPTIONS.

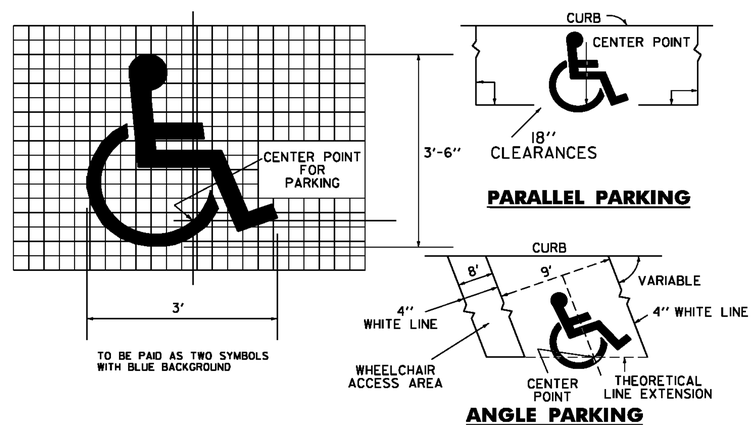

HANDICAPPED PAVEMENT MARKING DETAILS

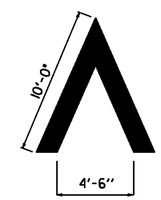

ARROW HEAD DETAIL

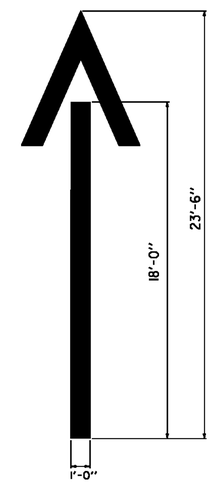

WRONG WAY ARROW

NOT TO SCALE

PAVEMENT MARKING DETAILS

PAVEMENT MARKING DETAILS SHEET 2	PROJECT NAME: **STATEWIDE** PROJECT NO.: **NHG MARK (206)** DESIGN FILE NAME: 12b002.dgn PROJECT MANAGER: A GAMBLE IPARM FILE NAME: 12b002pm2.I PLOT DATE: 12-MAR-2012 DRAWN BY: KAS SHEET: 17 OF 20