PAGE	LINE	MARK	QTY	MARK	MATERIAL	LENGTH FT	LENGTH INCHES	REMARKS	WT	PROCUREMENT NOTES
		SG8	1		GIRDER				24651	
1	J		1	wt	PL $\frac{1}{2}$x38	61	$8\frac{1}{8}$	A709-50WT2	3977	
1	J		1	wb	PL $\frac{1}{2}$x38	61	$4\frac{7}{8}$	A709-50WT2	3970	
1	N		1	tw	PL $\frac{7}{8}$x20	40	11		2437	
1	L		1	tb	PL $\frac{7}{8}$x20	61	$11\frac{7}{8}$		4862	
1	E		1	bw	PL $\frac{7}{8}$x20	33	5	A709-50WT2	1990	
1	A		1	bb	PL $1\frac{1}{4}$x20	56	0	A709-50WT2	4764	
1	E		1	bc	PL $\frac{7}{8}$x20	33	$4\frac{3}{16}$	A709-50WT2	1986	
2	B		4	x1a	PL $\frac{3}{4}$x$8\frac{1}{2}$	3	2	MIF	69	
2	C		8	x1c	PL $\frac{1}{2}$x5	3	2		27	
2	D		1	x1f	PL $\frac{1}{4}$x$2\frac{7}{8}$	1	$1\frac{1}{4}$		3	
4	B		154		STUD $\frac{7}{8}$ ϕ	0	7	AGS	1	

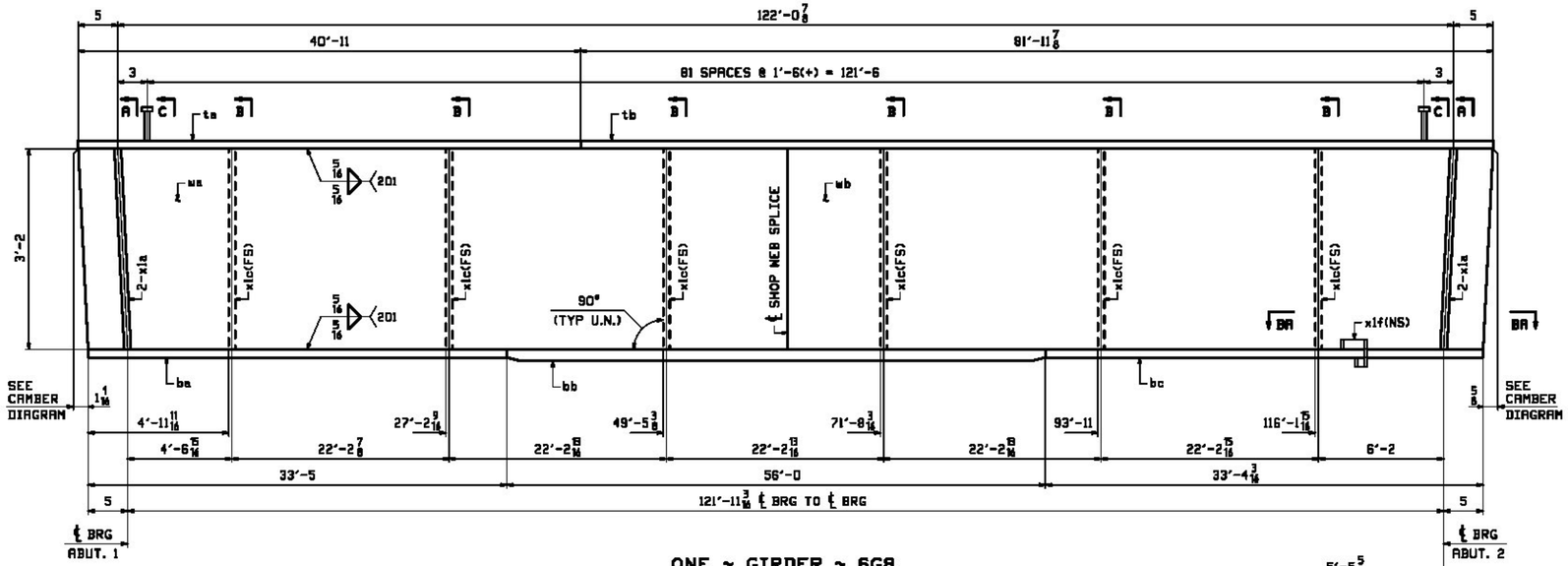

ONE ~ GIRDER ~ 6G8

NOTES:
1. FOR GENERAL NOTES SEE SHEET GN1.
2. FOR GIRDER STANDARD DETAILS SEE SHEET X1.
3. FOR CAMBER & FLANGE DIAGRAM SEE SHEET C1.
4. T2 - DENOTES CHARPY V-NOTCH TESTING REQUIRED.

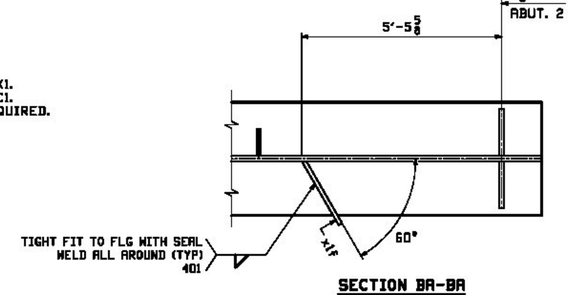

SECTION BA-BA

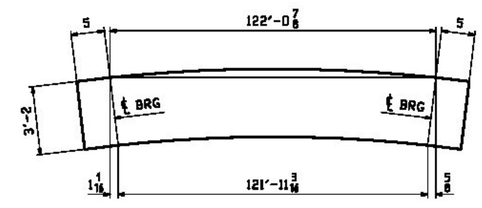

ORIENTATION DIAGRAM

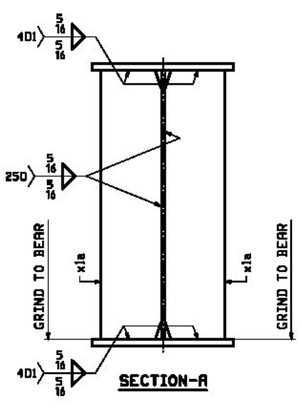

SECTION-A

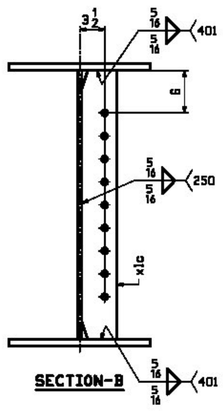

SECTION-B

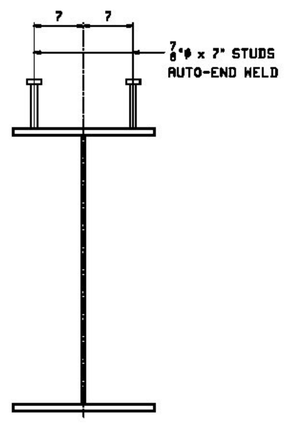

SECTION-C

REV.	DATE	REMARKS	DWN	CHK	APVL	SHOP
0						

MATERIAL:	SURFACE PREP. & PAINT:	HOLES:	SHOP BOLTS:
A709-50W	SEE GN1	15/16"ϕ U.N.	NONE

DESCRIPTION: GIRDER ~ 6G8

CASCO BAY STEEL STRUCTURES, INC.
1 WALLACE AVE. PHONE (207) 780-6722
SOUTH PORTLAND, ME 04106 FAX. (207) 780-6726

STRUCTURE: VT RTE 131 OVER TWENTYMILE STREAM WINDSOR COUNTY VERMONT AGENCY OF TRANSPORTATION		DRAWN: EEO	DATE: 11/21
		CHKD: DO	DATE: 11/25
LOCATION: CAVENDISH, VERMONT		JOB NO.	DWG NO.
PROJ NO. ER BRF 0146(13)		541	6
CUSTOMER: COLD RIVER BRIDGES, LLC			REV. △

JOB NO.	DRAWING NO.	REV.
541	6	