RUN INFO		SHIP	BILL OF MATERIAL						JOB NO.	DRAWING NO.	REV.
									541	3	
PAGE	LINE	MARK	QTY	MARK	MATERIAL	LENGTH FT	LENGTH INCHES	REMARKS	WT	PROCUREMENT NOTES	
		3G3	1		GIRDER				23052		
1	J		1	wa	PL $\frac{1}{2}$x38	61	$8\frac{1}{16}$	A709-50WT2	3976		
1	J		1	wb	PL $\frac{1}{2}$x38	61	$4\frac{7}{8}$	A709-50WT2	3970		
1	S		1	ta	PL $\frac{7}{8}$x16	40	11		2193		
1	Q		1	tb	PL $\frac{7}{8}$x16	61	$11\frac{3}{4}$		4394		
1	G		1	ba	PL $\frac{7}{8}$x16	33	5	A709-50WT2	1791		
1	C		1	bb	PL $1\frac{1}{4}$x16	56	0	A709-50WT2	4289		
1	G		1	bc	PL $\frac{7}{8}$x16	33	$4\frac{1}{4}$	A709-50WT2	1788		
2	B		4	x1a	PL $\frac{3}{8}$x$8\frac{1}{2}$	3	2	MIF	69		
2	C		8	x1c	PL $\frac{1}{2}$x5	3	2		27		
4	B		164		STUD $\frac{7}{8}$ ϕ	0	7	AUGN	1		

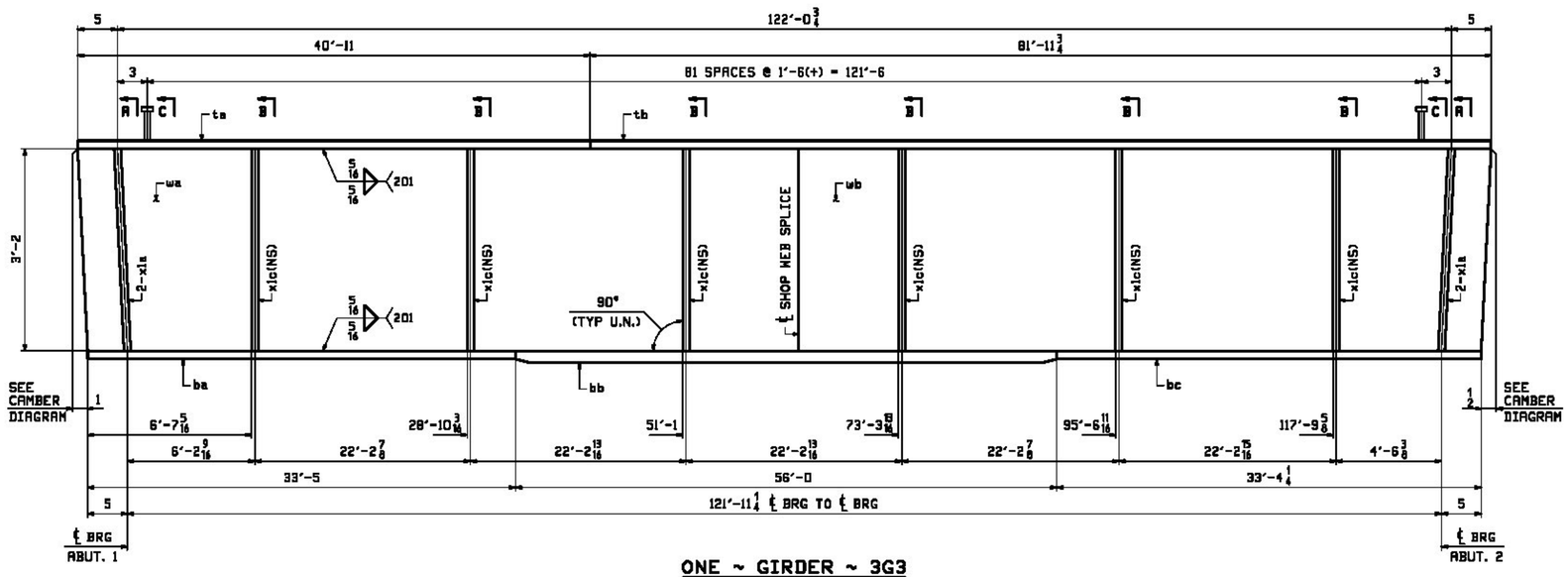

ONE ~ GIRDER ~ 3G3

NOTES:
1. FOR GENERAL NOTES SEE SHEET GN1.
2. FOR GIRDER STANDARD DETAILS SEE SHEET X1.
3. FOR CAMBER & FLANGE DIAGRAM SEE SHEET C1.
4. T2 - DENOTES CHARPY V-NOTCH TESTING REQUIRED.

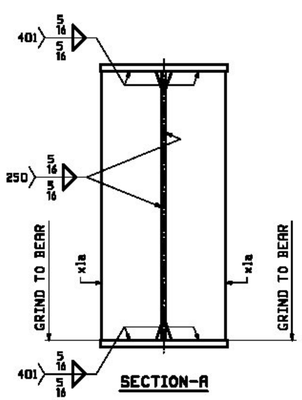

SECTION-A

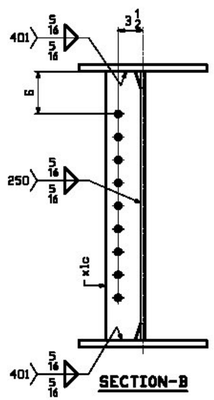

SECTION-B

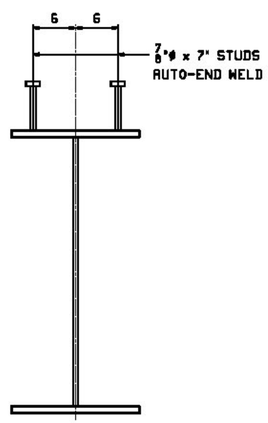

SECTION-C

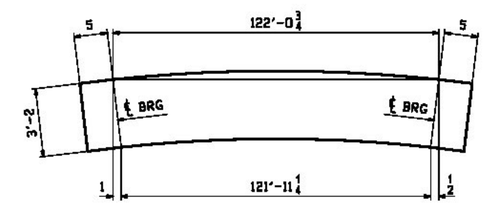

ORIENTATION DIAGRAM

REV.	DATE	REMARKS	DWN	CHK	APVL	SHOP
0						

MATERIAL:	SURFACE PREP. & PAINT:	HOLES:	SHOP BOLTS:
A709-50W	SEE GN1	15/16"ϕ U.N.	NONE

DESCRIPTION: GIRDER ~ 3G3

CASCO BAY STEEL STRUCTURES, INC.
1 WALLACE AVE. PHONE (207) 780-6722
SOUTH PORTLAND, ME 04106 FAX. (207) 780-6726
TEMSOR 32534

STRUCTURE: VT RTE 131 OVER TWENTYMILE STREAM WINDSOR COUNTY VERMONT AGENCY OF TRANSPORTATION	DRAWN: EEO	DATE: 11/21	
	CHKD: DO	DATE: 11/25	
LOCATION: CAVENDISH, VERMONT	JOB NO.	DWG NO.	
PROJ NO. ER BRF 0146(13)	541	3	
CUSTOMER: COLD RIVER BRIDGES, LLC		REV. △	