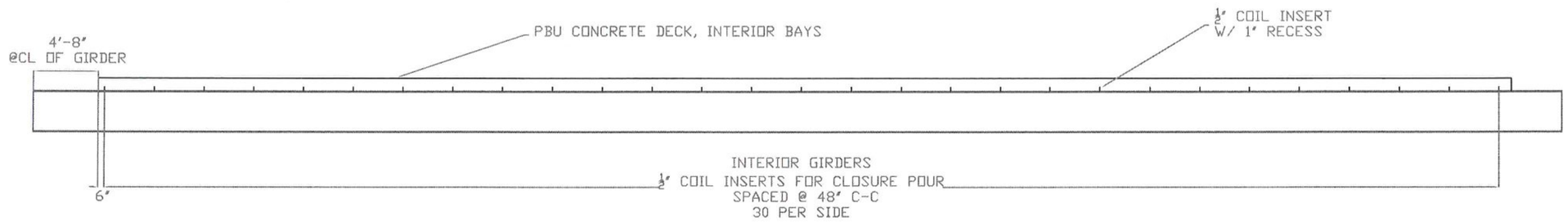


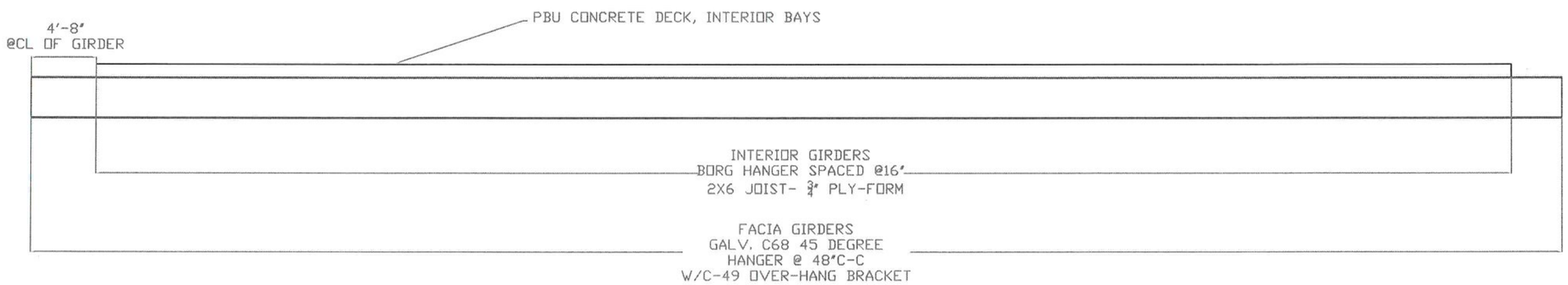


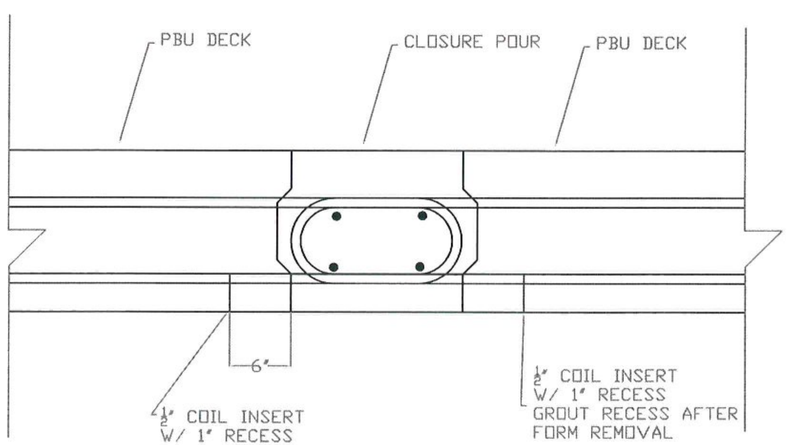


**T.Y. LIN INTERNATIONAL**

THE STAMPED DOCUMENTS ARE HEREBY:

_x_ APPROVED
___ APPROVED AS NOTED
___ REVISE AND RESUBMIT

SEE TRANSMITTAL FOR ADDITIONAL INFORMATION AS APPLICABLE.

THIS REVIEW IS FOR GENERAL CONFORMANCE WITH DESIGN CONCEPT ONLY. ANY DEVIATION FROM THE PLANS OR SPECIFICATIONS NOT CLEARLY NOTED BY THE CONTRACTOR HAS NOT BEEN REVIEWED. REVIEW BY THE ENGINEER SHALL NOT RELIEVE THE CONTRACTOR OF THE CONTRACTUAL RESPONSIBILITY FOR ANY ERRORS OR DEVIATION FROM THE CONTRACT REQUIREMENTS.

JOSH OLUND — REVIEWER
03/21/2014 — DATE

Vermont Agency of Transportation
**RECEIVED**
ON: March 17, 2014
and Checked for
**CONFORMANCE**
BY: Rob Young DATE: 03/24/2014

(REVISION #1 2/17/2014)

(REVISION #2 3/17/2014)

COLD RIVER BRIDGES, LLC
10 LANBRO LANE
WALPOLE, NH
TEL 603-756-9300 FAX 603-756-9303

CAVENDISH ER BRF 0146(13)

PBU CLOSURE POUR
COIL INSERT LAY-OUT

SHEET NUMBER 6

DATE: 1-6-14 Scale: