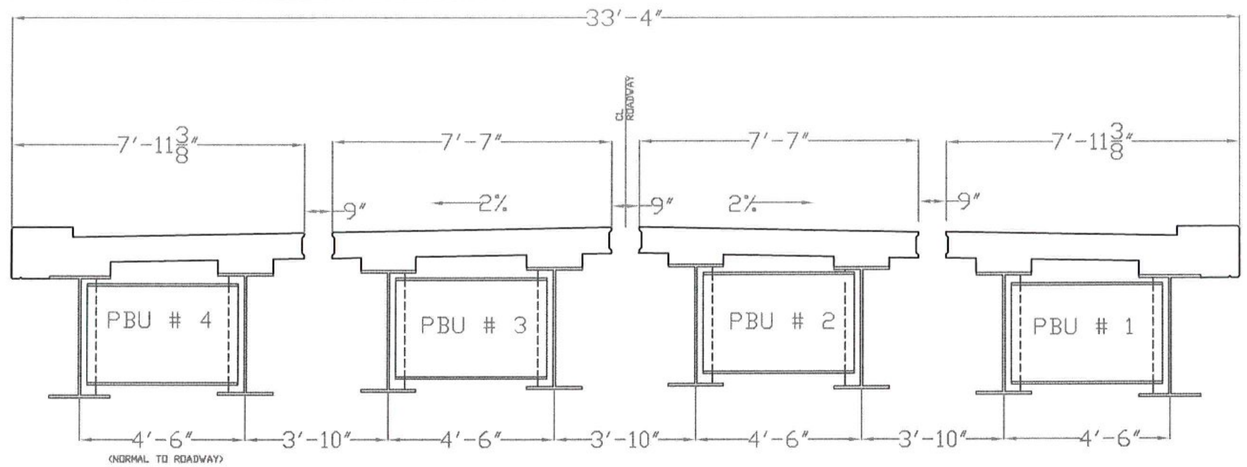

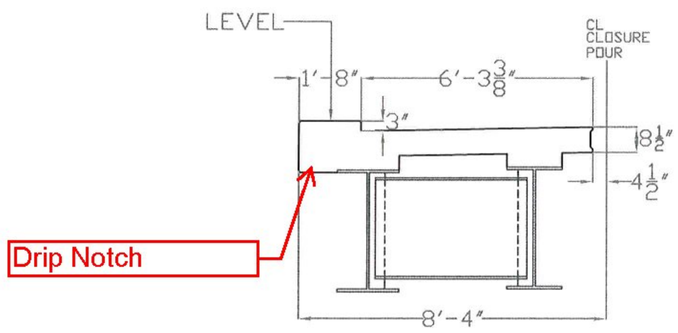

TYPICAL EXTERIOR PBU

T.Y. LIN INTERNATIONAL

THE STAMPED DOCUMENTS ARE HEREBY:

x APPROVED
___ APPROVED AS NOTED
___ REVISE AND RESUBMIT

SEE TRANSMITTAL FOR ADDITIONAL INFORMATION AS APPLICABLE.

THIS REVIEW IS FOR GENERAL CONFORMANCE WITH DESIGN CONCEPT ONLY. ANY DEVIATION FROM THE PLANS OR SPECIFICATIONS NOT CLEARLY NOTED BY THE CONTRACTOR HAS NOT BEEN REVIEWED. REVIEW BY THE ENGINEER SHALL NOT RELIEVE THE CONTRACTOR OF THE CONTRACTUAL RESPONSIBILITY FOR ANY ERRORS OR DEVIATION FROM THE CONTRACT REQUIREMENTS.

JOSH OLUND — REVIEWER
03/21/2014 — DATE

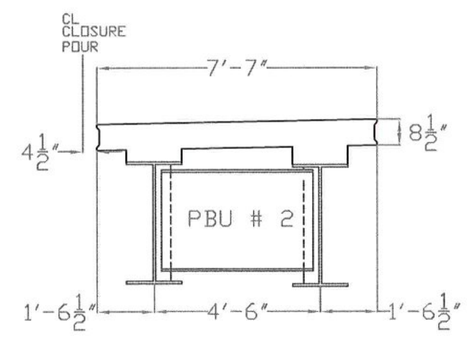

TYPICAL INTERIOR PBU

Vermont Agency of Transportation
RECEIVED
ON: March 17, 2014
and Checked for
CONFORMANCE
BY: Rob Young DATE: 03/24/2014

** SEE STRUCTURAL STEEL DRAWINGS
FOR GIRDER INFORMATION AND LAY-OUT

(REVISION #1 2/17/2014)
(REVISION #2 3/17/2014)

COLD RIVER BRIDGES, LLC
10 LANBRO LANE
TEL 603-756-9300 WALPOLE, NH FAX 603-756-9303

CAVENDISH ER BRF 0146(13)

PBU DETAILS

SHEET NUMBER 4

DATE: 2/17/14 SCALE: