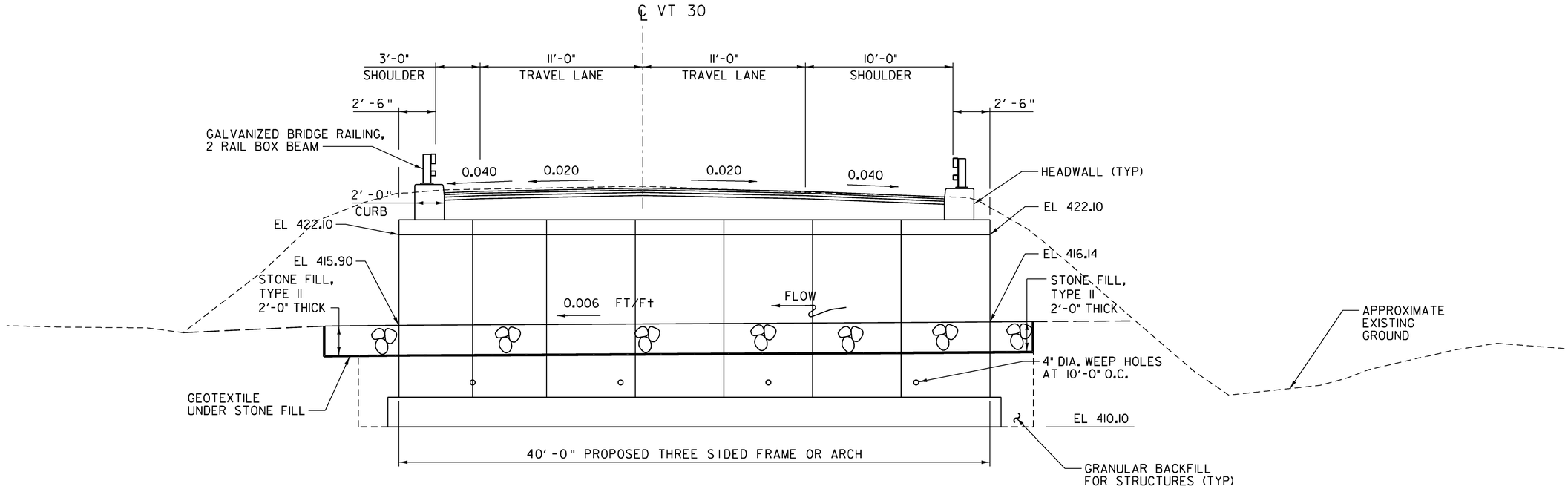

LONGITUDINAL SECTION

NOT TO SCALE

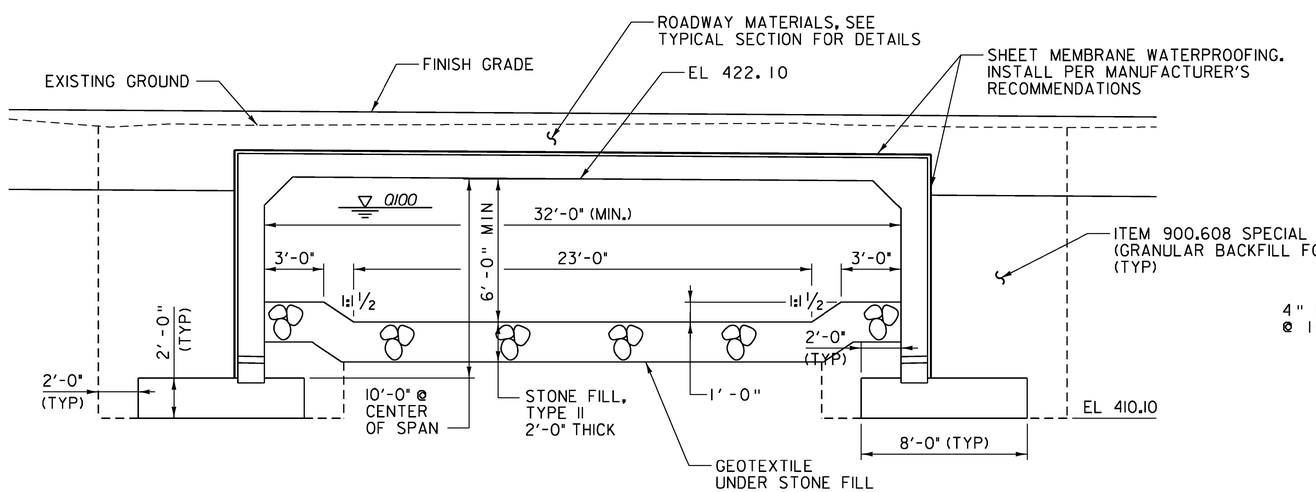

SECTION

NOT TO SCALE

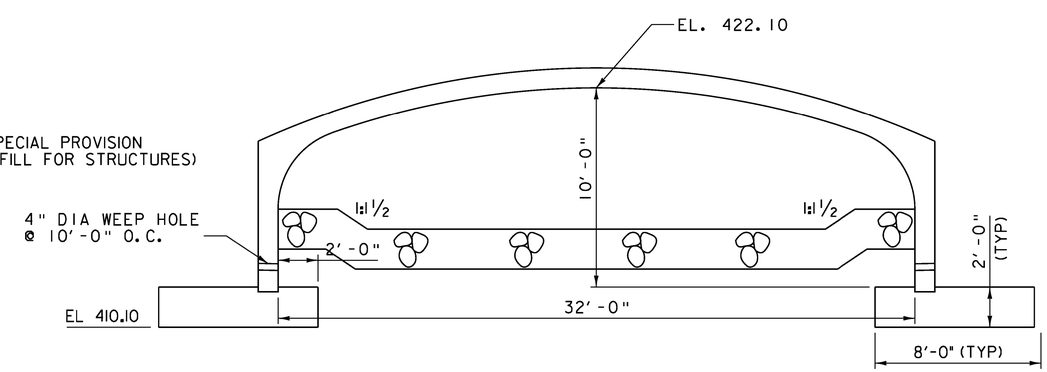

ARCH OPTION

NOT TO SCALE

NOTE: SEE FINAL APPROVED SHOP DRAWINGS
FOR ALL DETAILS REGARDING FRAME
AND FOOTINGS

Vanasse Hangen Brustlin, Inc.

PROJECT NAME: HUBBARDTON	
PROJECT NUMBER: ER STP 0161(26)	
FILE NAME: z11c288longsec.dgn	PLOT DATE: 7/16/2012
PROJECT LEADER: M.A. COLGAN	DRAWN BY: C.L. CILLEY
DESIGNED BY: S.G. FARNSWORTH	CHECKED BY: S.G. FARNSWORTH
BRIDGE SECTIONS	SHEET 28 OF 70