Vermont Agency of Transportation
RECEIVED
ON: April 30, 2015
and Checked for
CONFORMANCE
BY: Mark Sargent DATE: 5/7/2015

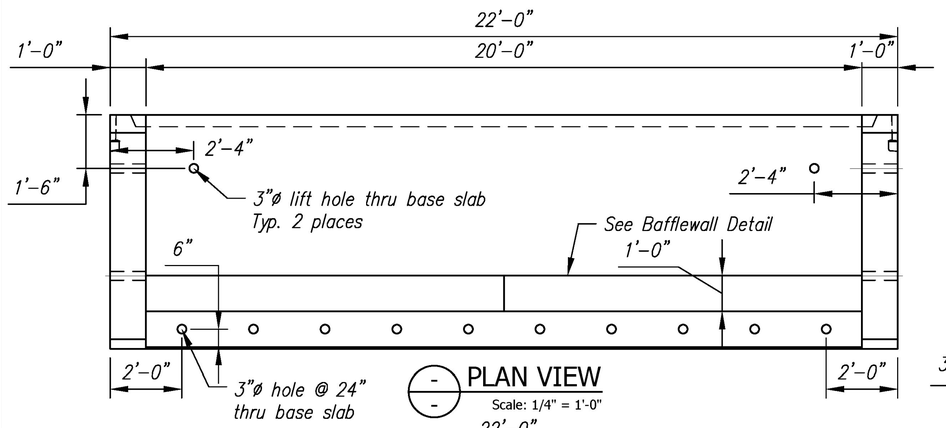

PLAN VIEW
Scale: 1/4" = 1'-0"

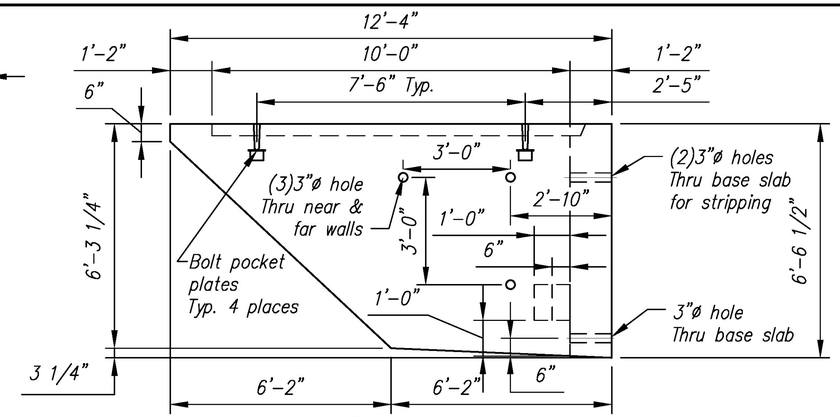

R. SIDE
Scale: 1/4" = 1'-0"

B4 Rebar Schedule			
MK		QTY	LENGTH
401	#4	20	11 '- 7 "
402	#4	76	6 '- 3 "
501	#5	30	19 '- 1 "
502	#5	21	21 '- 6 "

B4 BW Rebar Schedule			
MK		QTY	LENGTH
403	#4	2	19 '- 8 "

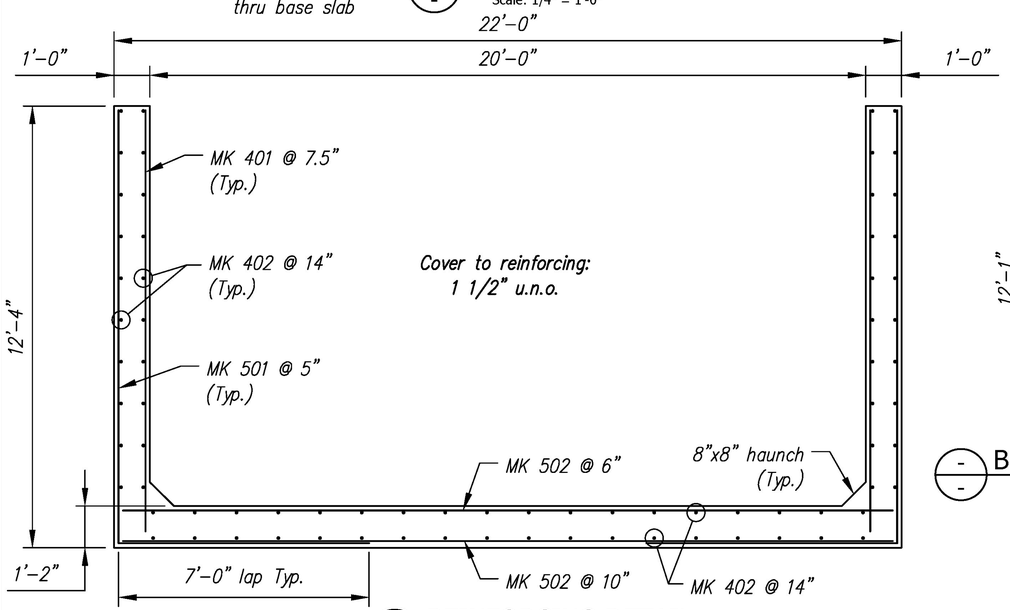

REINFORCING DETAIL
Scale: N.T.S.

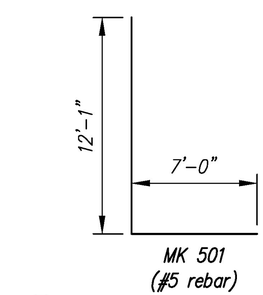

BENDING SCHEDULE
Scale: N.T.S.

B4 - BILL OF MATERIALS / EMBEDS				
CSI ID#	DESCRIPTION	QTY	UM	COMMENTS
CT-00005	CONSOLIDECK SALTGUARD (SILANE SILOXANE)	1.53	GA	
EM-00014	DBSAE #6 X 18" PLAIN	38	EA	DOWEL BAR SPLICER
EM-(		20	FT	
EM-(		4	EA	
JS-0		44	FT	AROUND BELL
RM-(		472	LB	
RM-(		1068	LB	
MX-F	OLIDATING	14.87	CY	
	TERIALS / EMBEDS			
CT-0	OXANE)	0.20	GA	
EM-(		38	EA	DOWEL IN
RM-(		26	LB	
MX-F	OLIDATING	0.51	CY	

REVIEWED	X
REVIEWED AS MODIFIED	
REVISE AND RESUBMIT	
NOT REVIEWED	

Stantec

Date: 4/24/2015

By: Nathan Tirk

This review by Stantec Consulting Services Inc. is for the sole purpose of ascertaining conformance with the general design concept. This review shall not mean that Stantec Consulting Services Inc approves the detail design inherent in the shop drawings, responsibility for which shall remain with the Contractor. Submitting same, and such review shall not relieve the Contractor of his responsibility for errors or omissions in the shop drawing or of his responsibility for meeting all requirements of the Contract Documents. The contractor is responsible for dimensions to be confirmed and correlated at the job site, for information that pertains solely to the fabrication processes or to techniques of construction and installation and for coordination of the work of all subtrades.

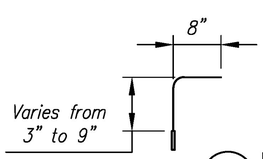

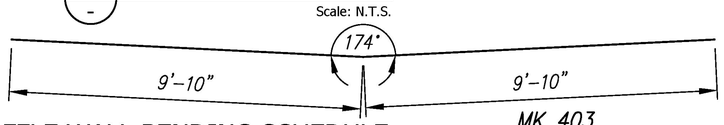

MK 403
(#4 bar)

BAFFLE WALL BENDING SCHEDULE
Scale: N.T.S.

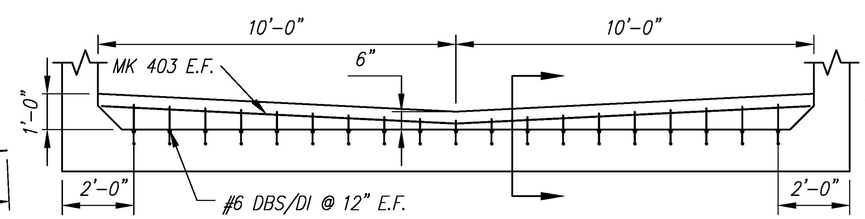

BAFFLE WALL DETAIL
Scale: N.T.S.

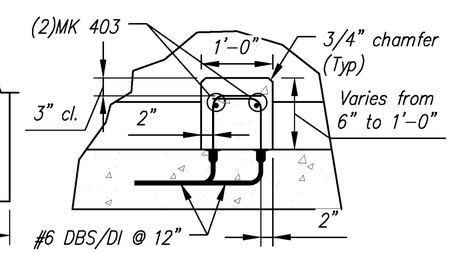

BAFFLE WALL SECTION
Scale: N.T.S.

Rev.	Date	DESCRIPTION	By
5			
4			
3			
2			
1			

REVISIONS

CSI Concrete Systems Inc.
9 Commercial St., Hudson, NH,03051
Phone 603-889-4163
Fax 603-889-2417

STATE AGENCY
VTrans Working to Get You There

Drawn By R. YEAGER	Date 16MAR2015
Concrete Cu. Yd. 11.91	Weight in Tons 24.12
Approved By	Date

J A MCDONALD, INC.
VT/AOT BRIDGE – STEEL CULVERT REPLACEMENT
BRIDGE #7, VT ROUTE 58, IRASBURG, VT

B

SHOP DRAWING – B4

Drawing No. C22283–L02–B4

REV 0

Quantity: 1 | Project No: STPCULV30 | SHEET 4 OF 9