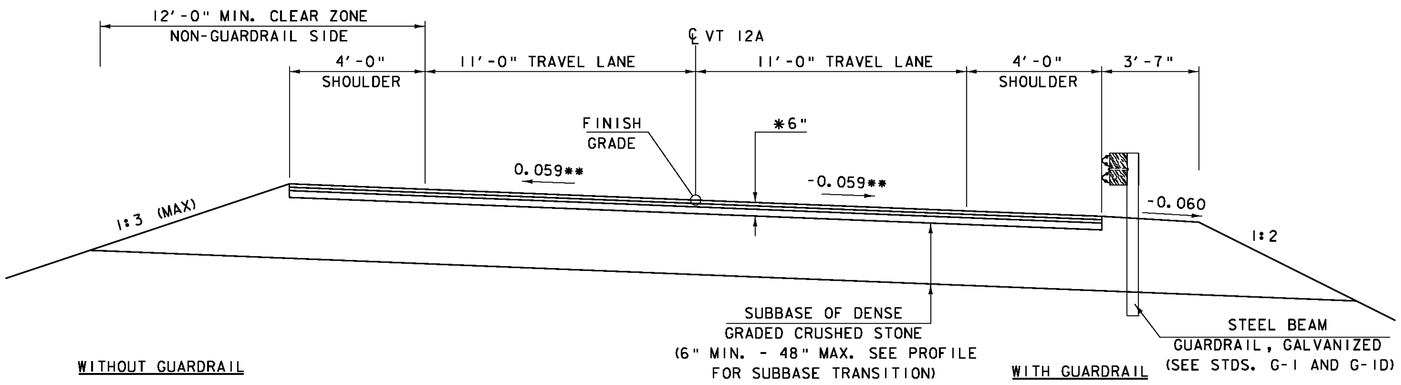

* SEE PAVEMENT NOTE ON SHEET 42.
** MATCH EXISTING CROSS SLOPE ON APPROACHES

VT 12A ROADWAY TYPICAL SECTION

SCALE: 3/8" = 1'-0"

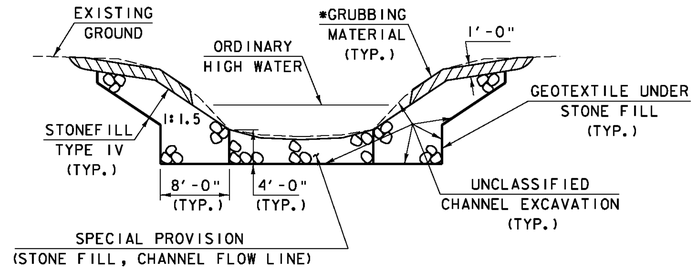

CHANNEL TYPICAL SECTION

NOT TO SCALE

* GRUBBING MATERIAL SHALL NOT BE PLACED ON THE STONE FILL IN THE AREA UNDER THE BRIDGE. WHENEVER CHANNEL SLOPE INTERSECTS ROADWAY SUBBASE, GRUBBING MATERIAL SHALL BEGIN AT THE BOTTOM OF SUBBASE.

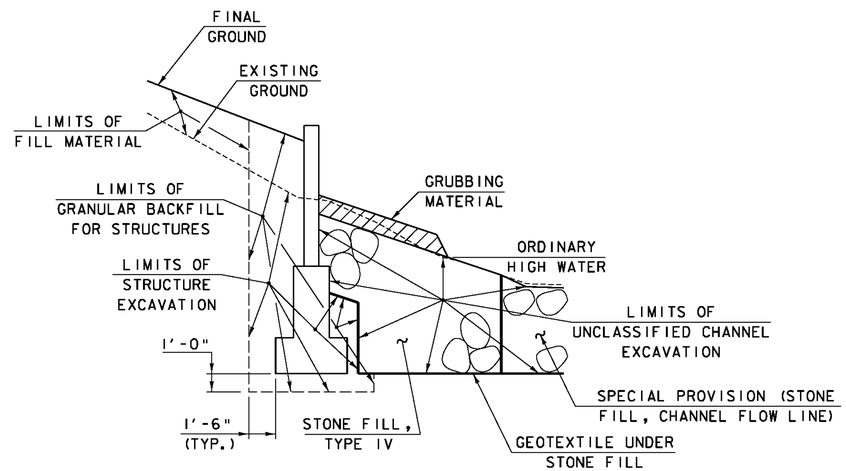

WINGWALL EXCAVATION AND FILL DETAIL

NOT TO SCALE

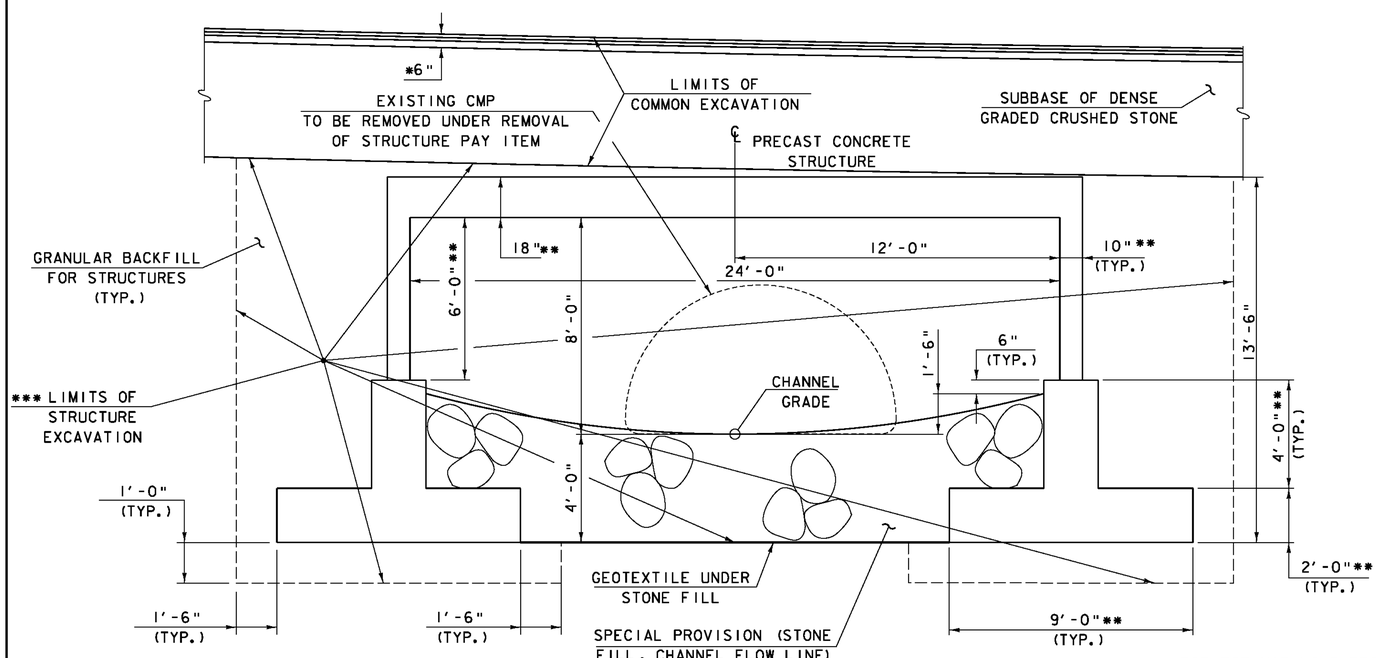

*** LIMITS EXCLUDE EXISTING CMP AND AREA INSIDE EXISTING CMP.

** FOR ESTIMATING PURPOSES ONLY. ACTUAL DIMENSIONS SHALL BE DETERMINED BY THE CONTRACTOR.

PRECAST CONCRETE STRUCTURE TYPICAL SECTION

SCALE: 3/8" = 1'-0"

MATERIAL TOLERANCES

(IF USED ON PROJECT)

SURFACE	
- PAVEMENT (TOTAL THICKNESS)	+/- 1/4"
- AGGREGATE SURFACE COURSE	+/- 1/2"
SUBBASE	+/- 1"
SAND BORROW	+/- 1"
GRANULAR BORROW	+/- 1"

1 0 1 2 3 4 5

SCALE: 3/8" = 1'-0"

Stantec

PROJECT NAME: ROXBURY
PROJECT NUMBER: ER 0187(9)

FILE NAME: ...\drawing\plotfiles\typ.dgn
PROJECT LEADER: G. BOGUE
DESIGNED BY: M. CHENETTE
TYPICAL SECTIONS

PLOT DATE: 9/21/2011
DRAWN BY: J. SOTER
CHECKED BY: G. BOGUE
SHEET 44 OF 54