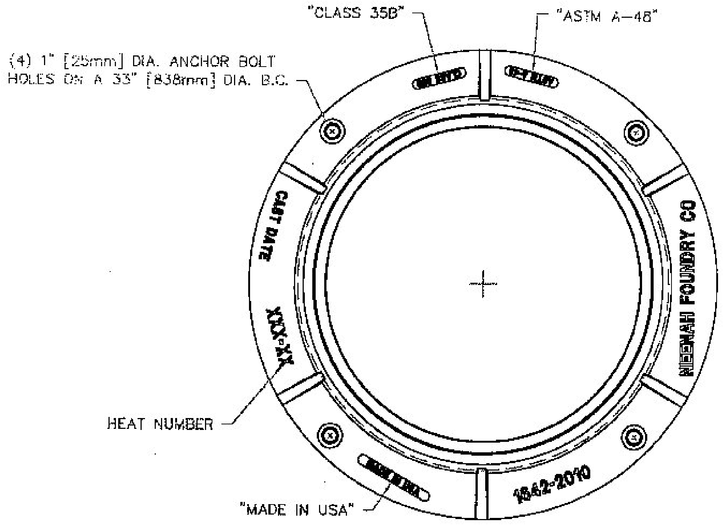

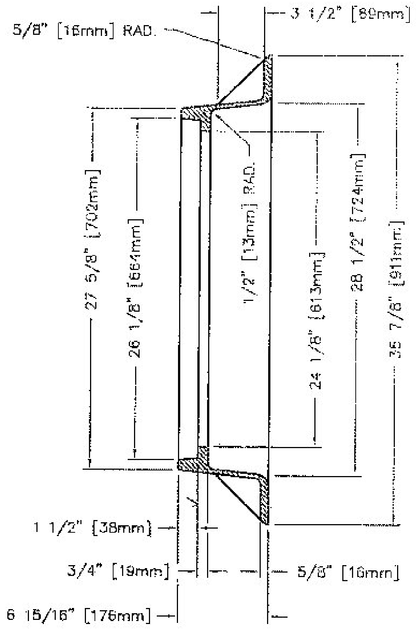

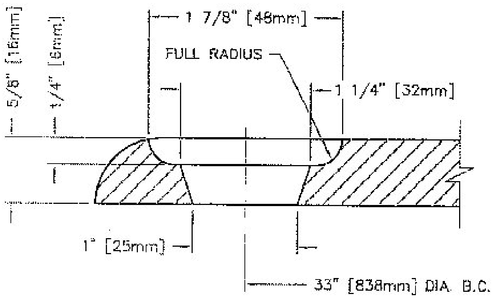

ANCHOR HOLE DETAIL
FULL SCALE

NOTE: ALL DIMENSIONS ARE SHOWN IN ENGLISH AND [METRIC].
SUITABLE FOR HS-25 LOADING
MATERIAL: CAST GRAY IRON ASTM A-48, CLASS 35B
FINISH: NOT PAINTED
WEIGHT: 147#

WAS COMPONENT NO. 1642-0001

DR. E. REMME	SCALE 1/8"=1"	TITLE: R-1642 FRAME	
CH.	DIM CHK.	NEENAH FOUNDRY COMPANY NEENAH WISCONSIN 54956	NF-16422010 B
APP.			
DATE 2-10-96			

DATE	REVISION		
10-14-2003	CORRECTED FILLETS	KMH	
09-09-2003	ADDED LETTERING ON FLANGE	ELA	
10-30-96	CHG. A-A DIM. FROM 26 3/8"	CRK	
		INT	

CAD DWG. REF: 16422010.DWG- 4