NOTES:
- ALL EDGES OF PRECAST TO HAVE A ¾" CHAMFER
- ELEVATION IS LOOKING AT BACK FACE OF HEADWALL
- HEADWALL TO BE CAST AGAINST BRIDGE UNIT
- BRIDGE UNITS MUST BE GROUTED OR BRACED WHEN SETTING PRECAST HEADWALLS
- HEADWALL WILL NOT HANG LEVEL. ADJUST CABLE LENGTHS AS REQUIRED

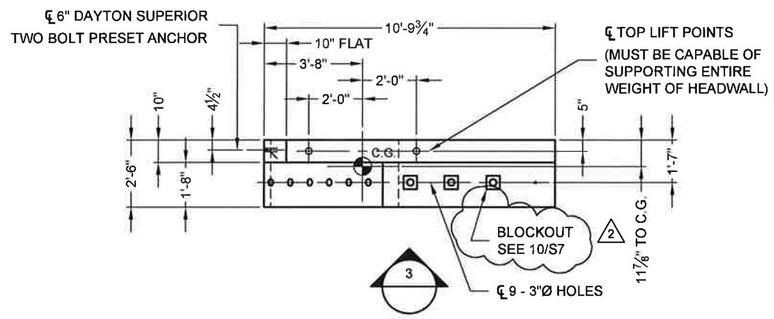

PLAN - HW1A

TOTAL WEIGHT = 3.6 TONS

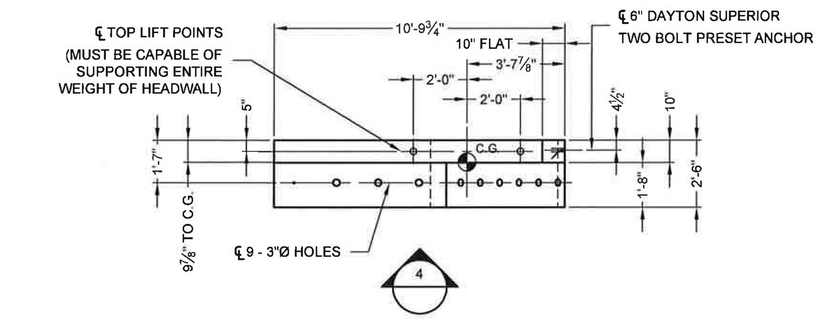

PLAN - HW1B

TOTAL WEIGHT = 5.2 TONS

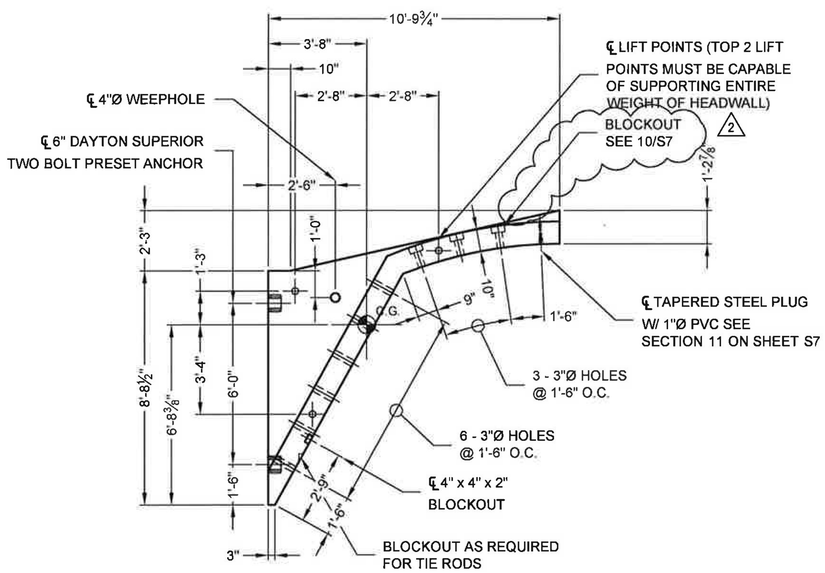

ELEVATION 3

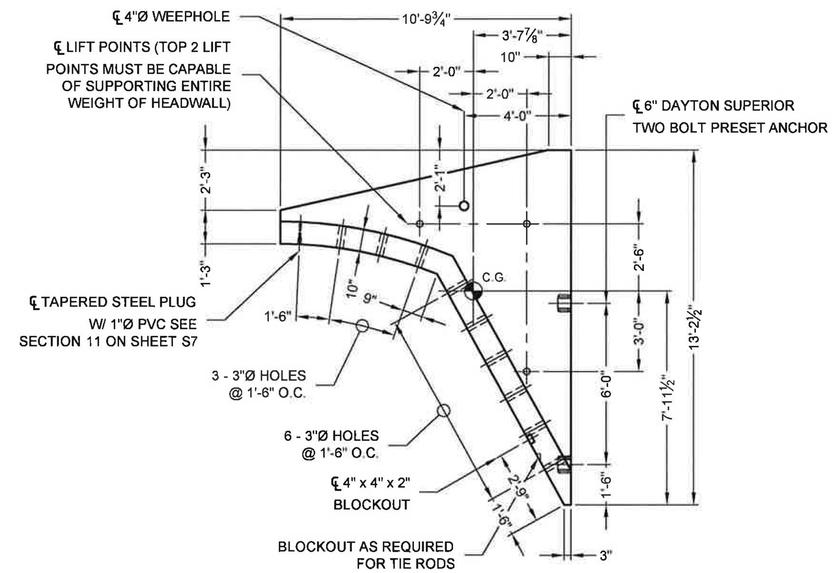

ELEVATION 4

The design and information shown on this drawing is provided as a service to the project owner, engineer and contractor by Contech Engineered Solutions LLC ("Contech"). Neither this drawing, nor any part thereof, may be used, reproduced or modified in any manner without the prior written consent of Contech. Failure to comply is done at the user's own risk and Contech expressly disclaims any liability or responsibility for such use.

If discrepancies between the supplied information upon which the drawing is based and actual field conditions are encountered as site work progresses, these discrepancies must be reported to Contech immediately for re-evaluation of the design. Contech accepts no liability for designs based on missing, incomplete or inaccurate information supplied by others.

MARK	DATE	REVISION DESCRIPTION	BY
2	4/14/2016	REVIEW COMMENTS	JDR
1	3/16/2016	NO CHANGES THIS SHEET	KDK

CONTECH® ENGINEERED SOLUTIONS LLC
www.ContechES.com
9025 Centre Pointe Dr., Suite 400, West Chester, OH 45069
800-338-1122 513-645-7000 513-645-7993 FAX

CON SPAN. O-SERIES

FABRICATION DRAWING

US ROUTE 2
BRIDGE NO. 126
TOWN OF LUNENBURG
ESSEX COUNTY, VERMONT

PROJECT No.:	SEQ. No.:	DATE:
468920	010	12/8/2015
DESIGNED: KDK	DRAWN: TRL	
CHECKED: JDR	APPROVED: PAC	
SHEET NO.: S4 OF S22		

I:\MERLIN\PROJECT\ACTIVE\468900\468920\468920-10-CON_SPAN_O_SERIES\DRAWINGS\FABRICATION\PRE-468920-010-CO-FAB-D.DWG 4/14/2016 11:19 AM