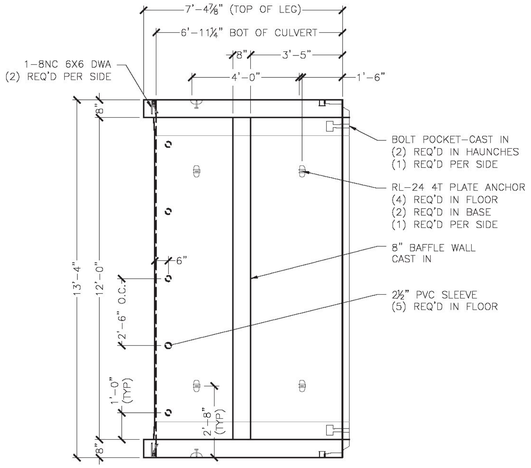

BC1 - 1 REQ'D

ITEM 281207
UNIT WEIGHT AND VOLUME:
CULVERT: 5.40CY (22,680#)
BAFFLE WALL: .28CY (1,180#)
TOTAL WEIGHT: 23,860#

1 S3.0 BC1 PLAN VIEW
⅜" = 1'-0"

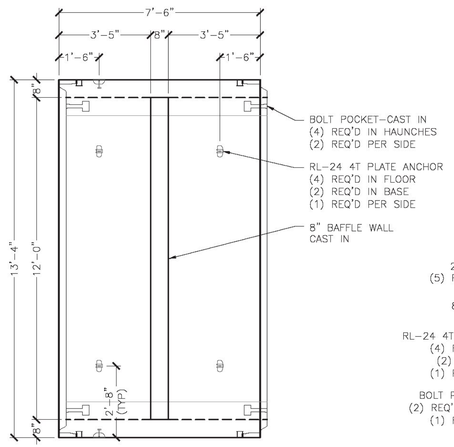

BC2 - 10 REQ'D

ITEM 281207
UNIT WEIGHT AND VOLUME:
CULVERT: 5.53CY (23,220#)
BAFFLE WALL: .28CY (1,180#)
TOTAL WEIGHT: 24,780#

3 S3.0 BC2 PLAN VIEW
⅜" = 1'-0"

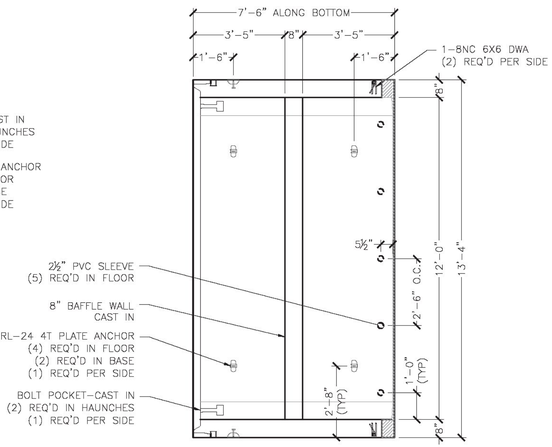

BC3 - 1 REQ'D

ITEM 281207
UNIT WEIGHT AND VOLUME:
CULVERT: 5.40CY (22,680#)
BAFFLE WALL: .28CY (1,180#)
TOTAL WEIGHT: 23,860#

5 S3.0 BC3 PLAN VIEW
⅜" = 1'-0"

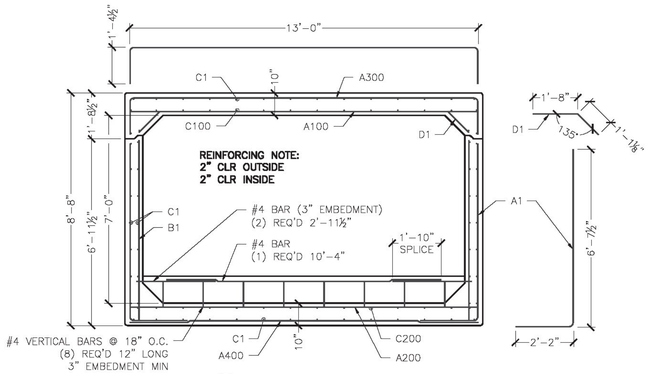

9 S3.0 REINFORCING SECTION
⅜" = 1'-0"

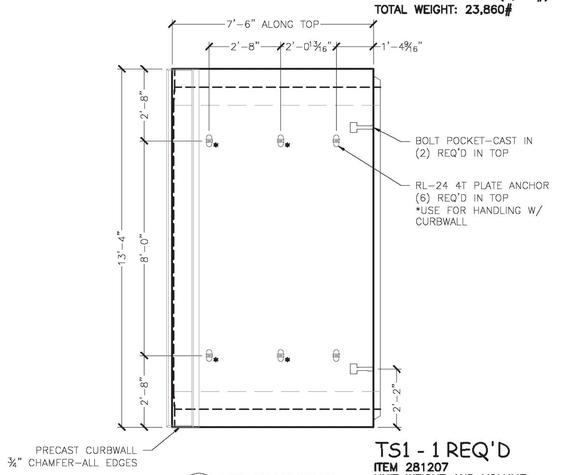

TS1 - 1 REQ'D

ITEM 281207
UNIT WEIGHT AND VOLUME:
TOP SLAB: 3.54CY (14,870#)
CURBWALL: 1.57CY (6,600#)
TOTAL WEIGHT: 21,470#

2 S3.0 TS1 PLAN VIEW
⅜" = 1'-0"

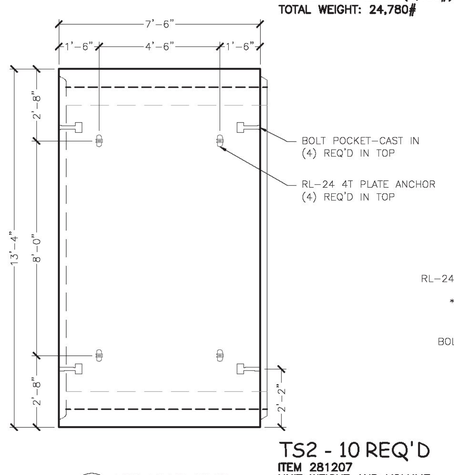

TS2 - 10 REQ'D

ITEM 281207
UNIT WEIGHT AND VOLUME:
TOP SLAB: 3.54CY (14,870#)

4 S3.0 TS2 PLAN VIEW
⅜" = 1'-0"

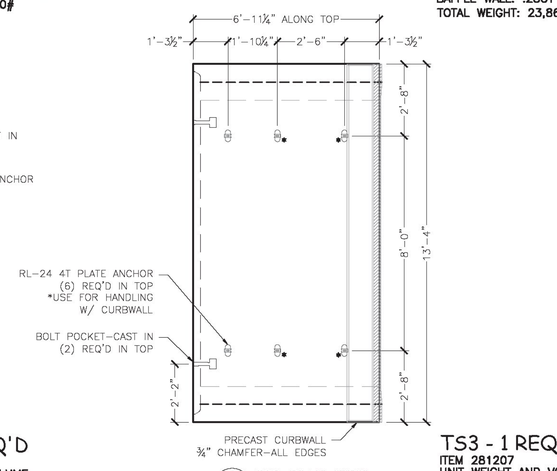

TS3 - 1 REQ'D

ITEM 281207
UNIT WEIGHT AND VOLUME:
TOP SLAB: 3.31CY (13,900#)
CURBWALL: 1.52CY (6,390#)
TOTAL WEIGHT: 20,290#

6 S3.0 TS3 PLAN VIEW
⅜" = 1'-0"

TS2/BC2 REINFORCING SCHEDULE (COUNTS REFLECT 1 UNIT)						
LOCATION	MARK	QTY	SIZE	SPACING	TYPE	CUT LENGTH
TOP SLAB (INT)	A100	14	#9	6"	STRAIGHT	13'-0"
BOT. SLAB (INT)	A200	10	#5	9"	STRAIGHT	13'-0"
TOP SLAB (EXT)	A300	8	#4	12"	"U" BAR	15'-6½"
BOT. SLAB (EXT)	A400	13	#6	7"	STRAIGHT	13'-0"
WALL (EXT)	A1	26	#6	7"	"L" BAR	8'-8¼"
WALL (INT)	B1	20	#4	9"	STRAIGHT	6'-9"
LONGIT. TOP (EXT)	C1	14	#4	12"	STRAIGHT	7'-2"
LONGIT. TOP (INT)	C100	14	#4	12"	STRAIGHT	7'-2"
LONGIT. BOT. (INT)	C200	14	#4	12"	STRAIGHT	7'-2"
LONGIT. BOT (EXT)	C1	14	#4	12"	STRAIGHT	7'-2"
LONGIT. WALL (EXT)	C1	14	#4	12"	STRAIGHT	7'-2"
LONGIT. WALL (INT)	C1	14	#4	12"	STRAIGHT	7'-2"
TOP SLAB (HAUNCH)	D1	26	#4	7"	BENT BARS	2'-9¼"

TS1/BC1 REINFORCING SCHEDULE (COUNTS REFLECT 1 UNIT)							
LOCATION	MARK	QTY	SIZE	SPACING	TYPE	CUT LENGTH	
TOP SLAB (INT)	A100	14	#9	6"	STRAIGHT	13'-0"	
BOT. SLAB (INT)	A200	10	#5	9"	STRAIGHT	13'-0"	
TOP SLAB (EXT)	A300	8	#4	12"	"U" BAR	15'-6½"	
BOT. SLAB (EXT)	A400	13	#6	7"	STRAIGHT	13'-0"	
WALL (EXT)	A1	26	#6	7"	"L" BAR	8'-8¼"	*
WALL (INT)	B1	18	#4	9"	STRAIGHT	6'-9"	*
LONGIT. TOP (EXT)	C1	14	#4	12"	STRAIGHT	7'-2"	
LONGIT. TOP (INT)	C100	14	#4	12"	STRAIGHT	7'-4½"	
LONGIT. BOT. (INT)	C200	14	#4	12"	STRAIGHT	6'-11"	
LONGIT. BOT (EXT)	C1	14	#4	12"	STRAIGHT	6'-7½"	
LONGIT. WALL (EXT)	C1	14	#4	12"	STRAIGHT	7'-1" TO 6'-7½"	
LONGIT. WALL (INT)	C1	14	#4	12"	STRAIGHT	7'-4" TO 6'-11"	
TOP SLAB (HAUNCH)	D1	26	#4	7"	BENT BARS	2'-9¼"	
TOP SLAB	DBS1	7	#4	24"	"L" DOWELS	2'-0"	
TOP SLAB	DBS2	14	#4	12"	"L" DOWELS	2'-0"	
CURBWALL	DBI1	14/7	#4	24"/12"	STRAIGHT	3'-0"	
CURBWALL	CWS1	8	#4	AS SHOWN	STRAIGHT	13'-0"	

TS3/BC3 REINFORCING SCHEDULE (COUNTS REFLECT 1 UNIT)							
LOCATION	MARK	QTY	SIZE	SPACING	TYPE	CUT LENGTH	
TOP SLAB (INT)	A100	14	#9	6"	STRAIGHT	13'-0"	
BOT. SLAB (INT)	A200	10	#5	9"	STRAIGHT	13'-0"	
TOP SLAB (EXT)	A300	7	#4	12"	"U" BAR	15'-6½"	
BOT. SLAB (EXT)	A400	13	#6	7"	STRAIGHT	13'-0"	
WALL (EXT)	A1	26	#6	7"	"L" BAR	8'-8¼"	*
WALL (INT)	B1	20	#4	9"	STRAIGHT	6'-9"	*
LONGIT. TOP (EXT)	C1	14	#4	12"	STRAIGHT	6'-7"	
LONGIT. TOP (INT)	C100	14	#4	12"	STRAIGHT	6'-4½"	
LONGIT. BOT. (INT)	C200	14	#4	12"	STRAIGHT	6'-10"	
LONGIT. BOT (EXT)	C1	14	#4	12"	STRAIGHT	7'-2"	
LONGIT. WALL (EXT)	C1	14	#4	12"	STRAIGHT	7'-2" TO 6'-8½"	
LONGIT. WALL (INT)	C1	14	#4	12"	STRAIGHT	6'-11" TO 6'-5¼"	
TOP SLAB (HAUNCH)	D1	24	#4	7"	BENT BARS	2'-9¼"	
TOP SLAB	DBS1	7	#4	24"	"L" DOWELS	2'-0"	
TOP SLAB	DBS2	14	#4	12"	"L" DOWELS	2'-0"	
CURBWALL	DBI1	14/7	#4	24"/12"	STRAIGHT	3'-0"	
CURBWALL	CWS1	8	#4	AS SHOWN	STRAIGHT	13'-0"	

*SPLAY LAST BAR TO FOLLOW SLOPE
MAINTAIN MAX SPACING

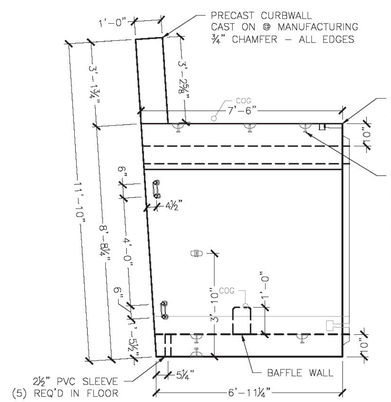

7 S3.0 BC1/TS1 ELEV. VIEW
⅜" = 1'-0"

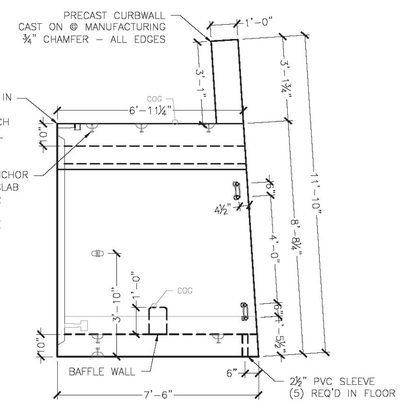

8 S3.0 BC3/TS3 ELEV. VIEW
⅜" = 1'-0"

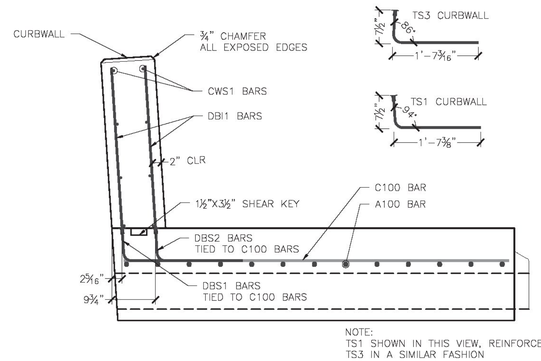

NOTE:
TS1 SHOWN IN THIS VIEW, REINFORCE
TS3 IN A SIMILAR FASHION

10 S3.0 CURBWALL REINFORCING SECTION
¾" = 1'-0"

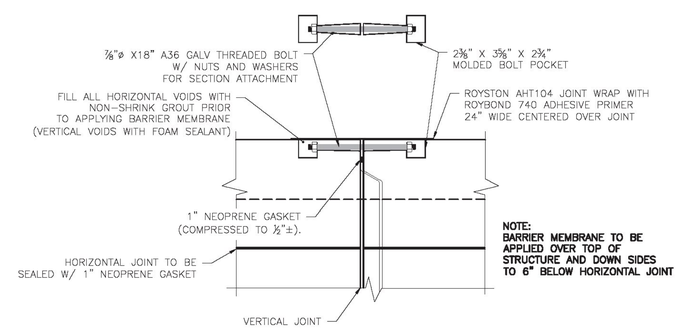

NOTE:
BARRIER MEMBRANE TO BE APPLIED OVER TOP OF STRUCTURE AND DOWN SIDES TO 6" BELOW HORIZONTAL JOINT

11 S3.0 BOX CULVERT JOINT CONNECTION DETAIL
1" = 1'-0"

No.	Date	Revision	By
1	XXXXXXXX	XX	XXX

STATE OF VERMONT
No. 9031
Structural
PROFESSIONAL ENGINEER
4/20/15

MICHIE CORPORATION
173 BUXTON INDUSTRIAL DRIVE - PO BOX 870
HENNIKER, NH 03242
PHONE: 603-428-3218
FAX: 603-428-7426
WWW.MICHIECORP.COM

Bridge 47 - Route 30 - VAOT STP Culv(31)
Winhall, VT

12'x7' Open Top Box Culvert - Culvert Section Details

Scale: AS SHOWN
Checked by: PJL
Drawn by: CFP
Designed by: PJL/CFP
Project No. 5779
Date: 2/26/2015

Prepared for:
Renaud Brothers, Inc.
283 Fort Bridgeman Rd #2
Vernon, VT 05354

DWG NO.
S3.0

Delta 2015.059.012

S:\PROJECTS\RENAUD BROTHERS\WINHALL, VT - VRAOS #STP CULV (31)\BRIDGE 47 PROP\5779\DWGS\BC W TS 12X7 BRKT RENAUD 5779.DWG 4/15/2015 2:25 PM