MK	QTY	DESCRIPTION	MATERIAL	LENGTH	REMARKS	REV
1A	6	ELASTOMERIC BEARING				-
1a1	6	3.875" X 16.000"	NATURAL RUBBER	8.500"	60+/-5 DURO GR.5; SHEAR MODULUS 135-184 PSI	-
1a2	54	16 GA. X 15.750"	A1011 GR 36	8.250"	PLAIN	-
1rp1	6	1.000" X 31.500"	A709 GR 36	10.000"	METALIZE, SEAL	-
1sp1	6	1.500" X 19.000"	A709 GR 36	12.500"	METALIZE, SEAL	-
1B	6	FABRIC PAD				-
1b1	6	0.125" X 31.500"	VT 707.07	10.000"	HOLES	-
1C	12	SIDE RESTRAINT				-
1c1	12	L8 X 6 X 1/2	A36	10.000"	METALIZE, SEAL	-
1c2	36	0.500" X 5.000"	A36	7.000"	CHAMFER; METALIZE, SEAL	-
1D	24	SWEDGED ROD				-
1d1	24	Ø1.500" X 20.000" SWEDGED ROD	F1554 GR 36		14" SWEDGE, 4" THRD; A153-HDG	-
1F	24	HEAVY HEX NUT				-
1f1	24	Ø1.500" HEX NUT	A563-DH OR A194-2H		A153-HDG, DRY LUBE & DYE	-
1G	24	PLATE WASHER				-
1g1	24	0.375" X 3.000"	A36	3.000"	1 9/16"Ø HOLE CENTERED; A123-HDG	-
1H	2	SAMPLE BEARINGS				-
1a1	2	3.875" X 16.000"	NATURAL RUBBER	8.500"	60+/-5 DURO GR.5; SHEAR MODULUS 135-184 PSI	-
1a2	18	16 GA. X 15.750"	A1011 GR 36	8.250"	PLAIN	-
					6/22/2012 9:04:32 AM	

PLEASE SEE ATTACHED RFI

PLEASE SEE ATTACHED RFI

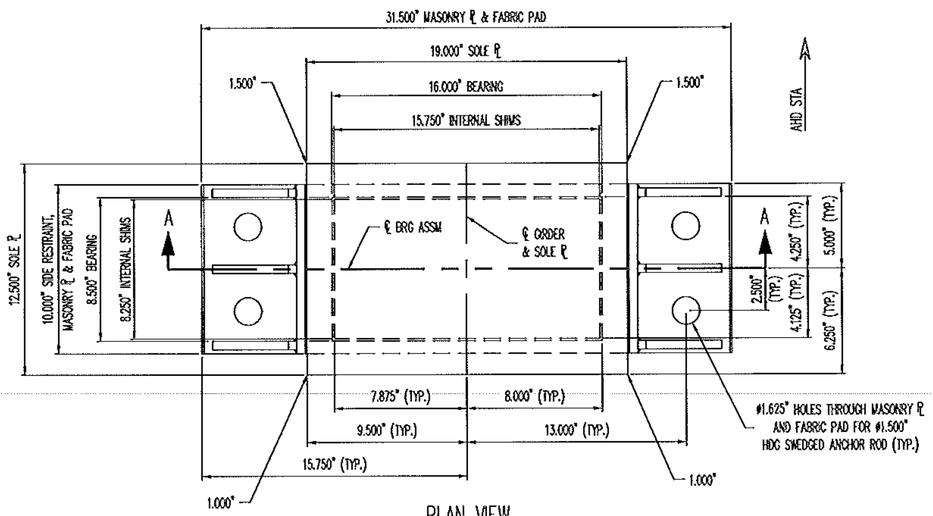

PLAN VIEW

EXP. ELASTOMERIC BEARING
(6) REQ'D @ ABUTMENT 1
(2) SAMPLE BEARINGS W/O EXT STEEL REQ'D

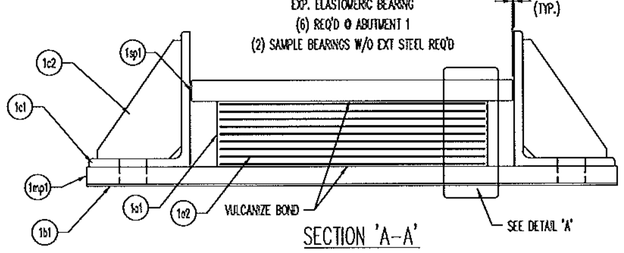

SECTION 'A-A'

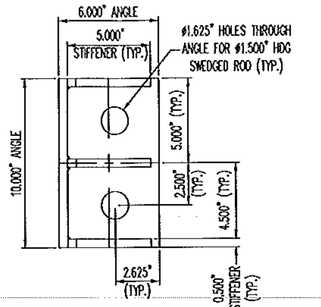

PLAN VIEW

SIDE RESTRAINT
(2) REQ'D PER BEARING
(12) REQ'D @ ABUTMENT 1

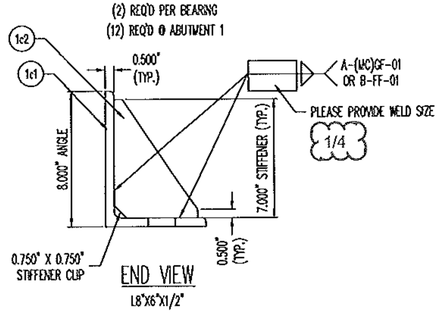

END VIEW

L8"X6"X1/2"

NOTE: THE OUTSIDE 0.500" STIFFENERS CURRENT POSITION PREVENTS A FILLET WELD ON THE OUTSIDE SURFACE. PLEASE DEFINE THE REQUIRED WELD, IF REQUIRED. NOTE THAT MOVING THE STIFFENER MAY IMPINGE THE PLATE WASHER.

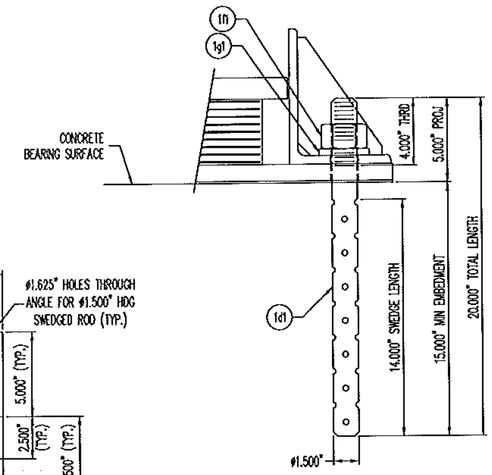

ANCHOR ROD ASSEMBLY

(24) REQ'D @ ABUTMENT 1

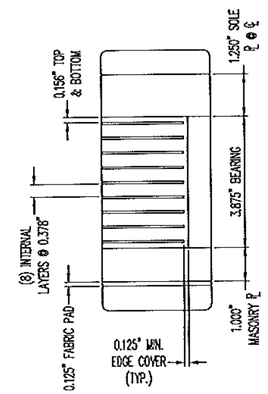

DETAIL 'A'

LOAD DATA	
MAX DL REACTION (KIPS)	45.0
MAX LL REACTION (KIPS)	79.0
MAX DL+LL REACTION (KIPS)	124.0

SEE SHEET 36775-1104-GN1 FOR GENERAL NOTES AND COATING LIMITS

REV.	DESCRIPTION	DATE	DET.	CKD.

Vermont Agency of Transportation

RECEIVED

CK'D BY CAM OK'D BY GFR

06/22/2012

RESUBMIT APPROVED AS NOTED

BY C. CARLSON DATE 06/29/2012

D.S. BROWN

THE D.S. BROWN COMPANY
300 E. CHERRY STREET
NORTH BALTIMORE, OHIO 45872
419.257.3561
FAX: 419.257.0332
WWW.DSBROWN.COM

	ITEM	QUANTITY
LOCATION — VT RT 9, PRINCIPAL ARTERIAL	36775-1104-1	6 OF 6
BRIDGE — 11	--	--
PROJECT — ER BHF 010-1(44)	--	--
—	--	--
—	--	--
	--	--
DESIGNER — VT AGENCY OF TRANSPORTATION	--	--
CUSTOMER — T BUCK CONSTRUCTION, INC.	--	--
	--	--

DESCRIPTION: VERSIFLEX ELASTOMERIC BEARING
BENNINGTON CO., VT

SCALE	DRAWN BY	CHECKED BY	DATE	
N.T.S.	SP	EAK	6/12	--
PROJECT NUMBER	PRODUCT CODE	REVISION	SHEET	
36775	1104	1	1	