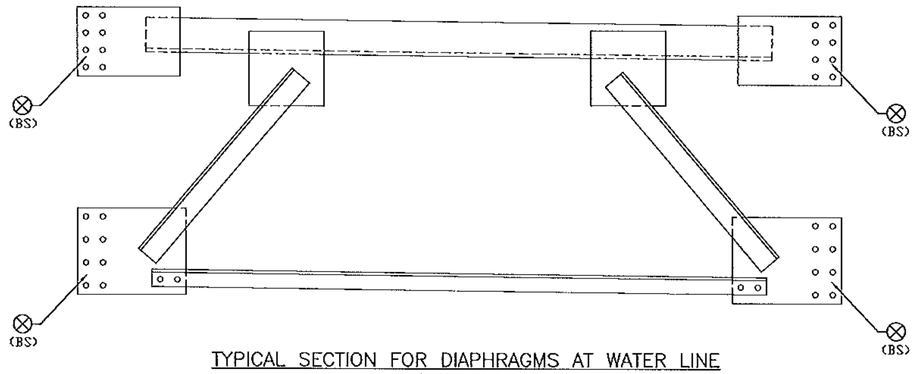

TYPICAL SECTION FOR DIAPHRAGMS AT WATER LINE
SEE ASSEMBLY DRAWING

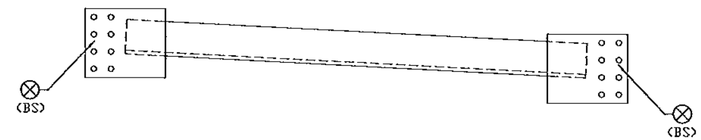

TYPICAL SECTION AT WATER LINE SUPPORTS
SEE ASSEMBLY DRAWING

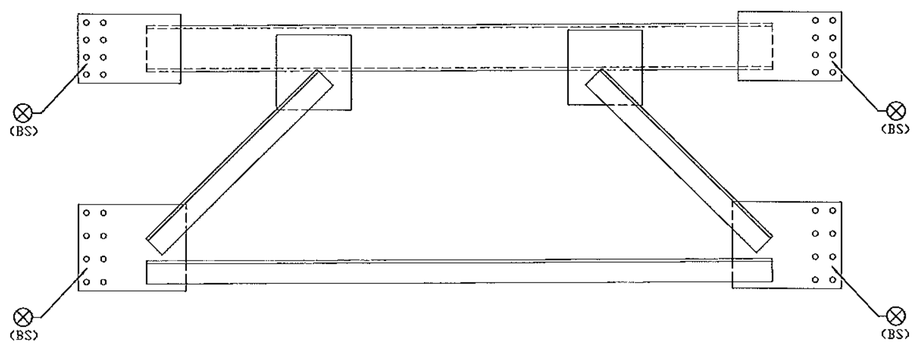

TYPICAL SECTION FOR DIAPHRAGMS
SEE ASSEMBLY DRAWING

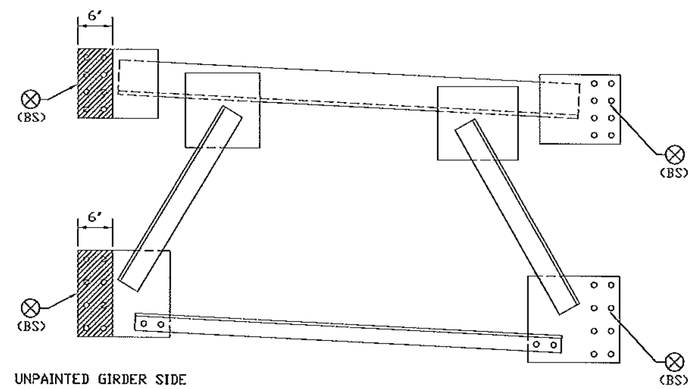

UNPAINTED GIRDER SIDE

TYPICAL SECTION FOR INTERMEDIATE CROSS FRAMES
IN 11'-6" GIRDER PAINTED ZONE
SEE ASSEMBLY DRAWING

GENERAL NOTES: SEE GN100
HOLES: 15/16 (U.N.)
COATING SYSTEM: SEE P100 AND P101

PRIMER ONLY, NO PAINT
BOTH SIDES 75 mm DIA AROUND HOLE
WHERE NOTED WITH THIS SYMBOL
(BS)

No	REVISION	DATE	PAR	VER.
A	FOR APPROVAL	07/06/12	BR	EG

NOTE: BOLT 1 WASHER: 1 WASHER UNDER NUT U.N.
BOLT 2 WASHER: 1 WASHER UNDER HEAD U.N.
1 WASHER UNDER HEAD U.N.

Vermont Agency of Transportation
RECEIVED
CK'D BY M.E.M OK'D BY C.W.M.
July 09, 2012
RESUBMIT APPROVED ✓
BY C. CARLSON DATE 07-27-2012

STRUCTAL Bridges
386 River Road, Claremont, NH 03743
Tel(603) 542-5202 Fax(603) 542-5312
a division of CANAM INC.

PROJECT: VT RT 9, BRIDGE NO. 11
TOWN OF WOODFORD, VT
OVER WALOOMSAC RIVER

TITLE: PAINT NOTES

REFERENCE: PROJECT NO. ER BHF 010-1 (44)

DRAWN BY	DATE	CONTRACT NO	
EG	JULY 2012	UN04260	
CHECKED BY	DATE	DRAWING NO	
GG	JULY 2012	P101 A	