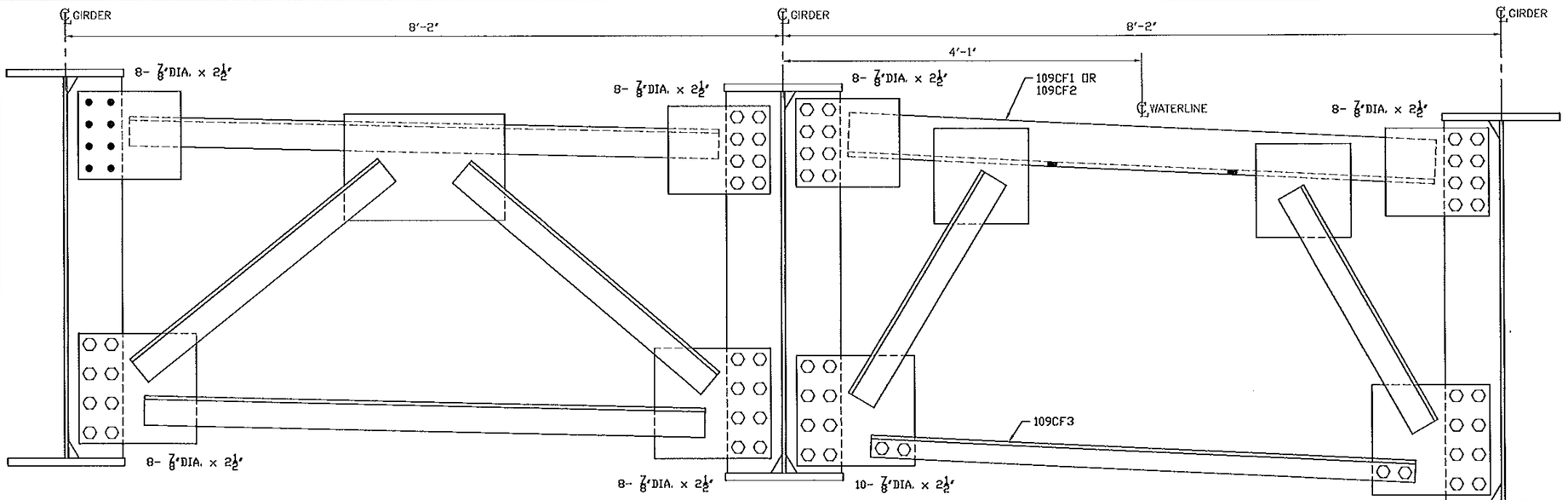

TYPICAL SECTION CROSS FRAME
(LOOKING WEST)

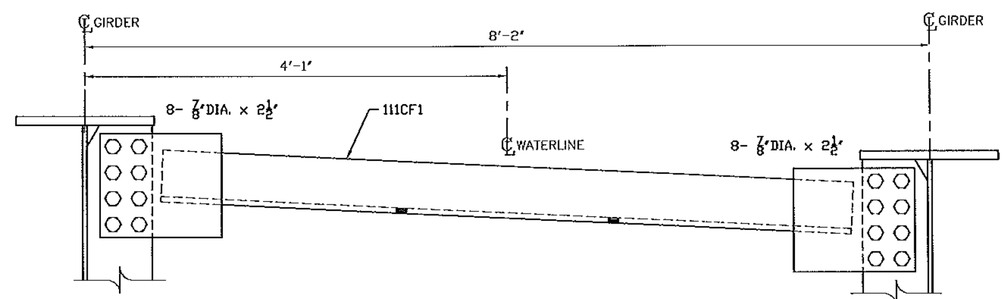

TYPICAL SECTION WATERLINE SUPPORT
(LOOKING WEST)

No	REVISION	DATE	PAR	VER.
A	FOR APPROVAL	07/06/12	BR	EG

NOTE: BOLT 1 WASHER: 1 WASHER UNDER NUT U.N.
BOLT 2 WASHER: 1 WASHER UNDER HEAD U.N.
1 WASHER UNDER HEAD U.N.

*** THIS DRAWING IS TO BE USED FOR MARKS AND BOLTS ONLY AND MUST BE READ IN CONJUNCTION WITH THE CONTRACT DRAWINGS SPECIFICATIONS AND SPECIAL PROVISIONS. THIS DRAWING IS NOT TO BE USED FOR CONSTRUCTION SEQUENCING OR AS AN ERECTION PROCEDURE.

Vermont Agency of Transportation
RECEIVED
CK'D BY M.E.M OK'D BY C.W.M.
July 09, 2012
RESUBMIT APPROVED ✓
BY C. CARLSON DATE 07-27-2012

STRUCTAL Bridges
a division of CANAM STEEL Inc.
386 River Road, Claremont, NH 03743
Tel(603) 542-5202 Fax(603) 542-5312

PROJECT: VT RT 9, BRIDGE NO. 11
TOWN OF WOODFORD, VT
OVER WALOOMSAC RIVER

TITLE: ERECTION PLAN CROSS FRAME

REFERENCE: PROJECT NO. ER BHF 010-1 (44)

DRAWN BY	DATE	CONTRACT NO.
BR	JULY 2012	UN04260
CHECKED BY GG	JULY 2012	DRAWING NO. E102 A