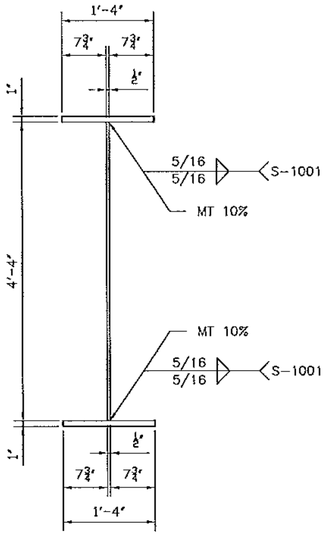

TYPICAL SECTION

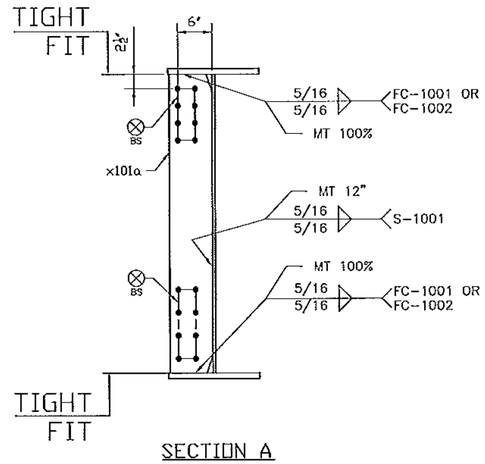

SECTION A

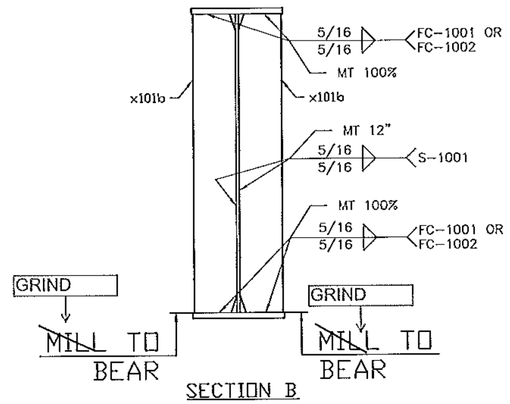

SECTION B

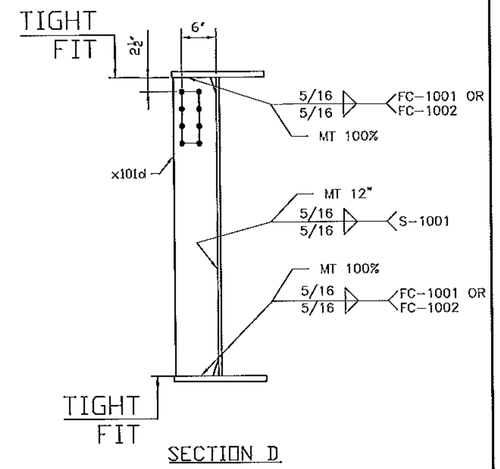

SECTION D

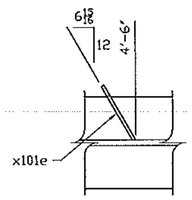

DETAIL 1

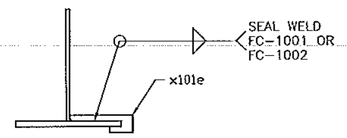

SECTION C

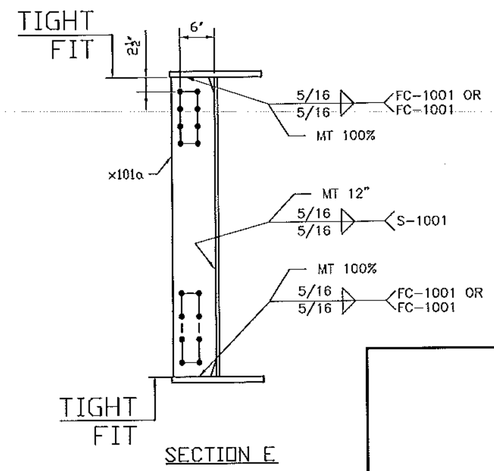

SECTION E

GENERAL NOTES: SEE GN100

HOLES: 15/16 (U.N.)

CLEANING AND PAINTING: SEE SHEET P100 AND P101

No	REVISION	DATE	PAR	VER.
A	FOR APPROVAL	07/06/12	BR	EG

NOTE: BOLT 1 WASHER: 1 WASHER UNDER NUT U.N.
BOLT 2 WASHER: 1 WASHER UNDER HEAD U.N.
1 WASHER UNDER HEAD U.N.

PRIMER ONLY, NO PAINT
BOTH SIDES 75 mm DIA AROUND HOLE
WHERE NOTED WITH THIS SYMBOL

(BS)

Vermont Agency of Transportation
RECEIVED
CK'D BY M.E.M OK'D BY C.W.M.
July 09, 2012
RESUBMIT APPROVED AS NOTED
BY C. CARLSON DATE 07-27-2012

STRUCTAL Bridges
386 River Road, Claremont, NH 03743
Tel(603) 542-5202 Fax(603) 542-3312
a division of CANAM STEEL Inc.

PROJECT: VT RT 9, BRIDGE NO. 11
TOWN OF WOODFORD, VT
OVER WALOOMSAC RIVER

TITLE: GIRDER 101G1

REFERENCE: PROJECT NO. ER BHF 010-1 (44)

DRAWN BY	DATE	CONTRACT NO.
BR	JULY 2012	UN04260
CHECKED BY GG	JULY 2012	DRAWING NO. 101-3 A