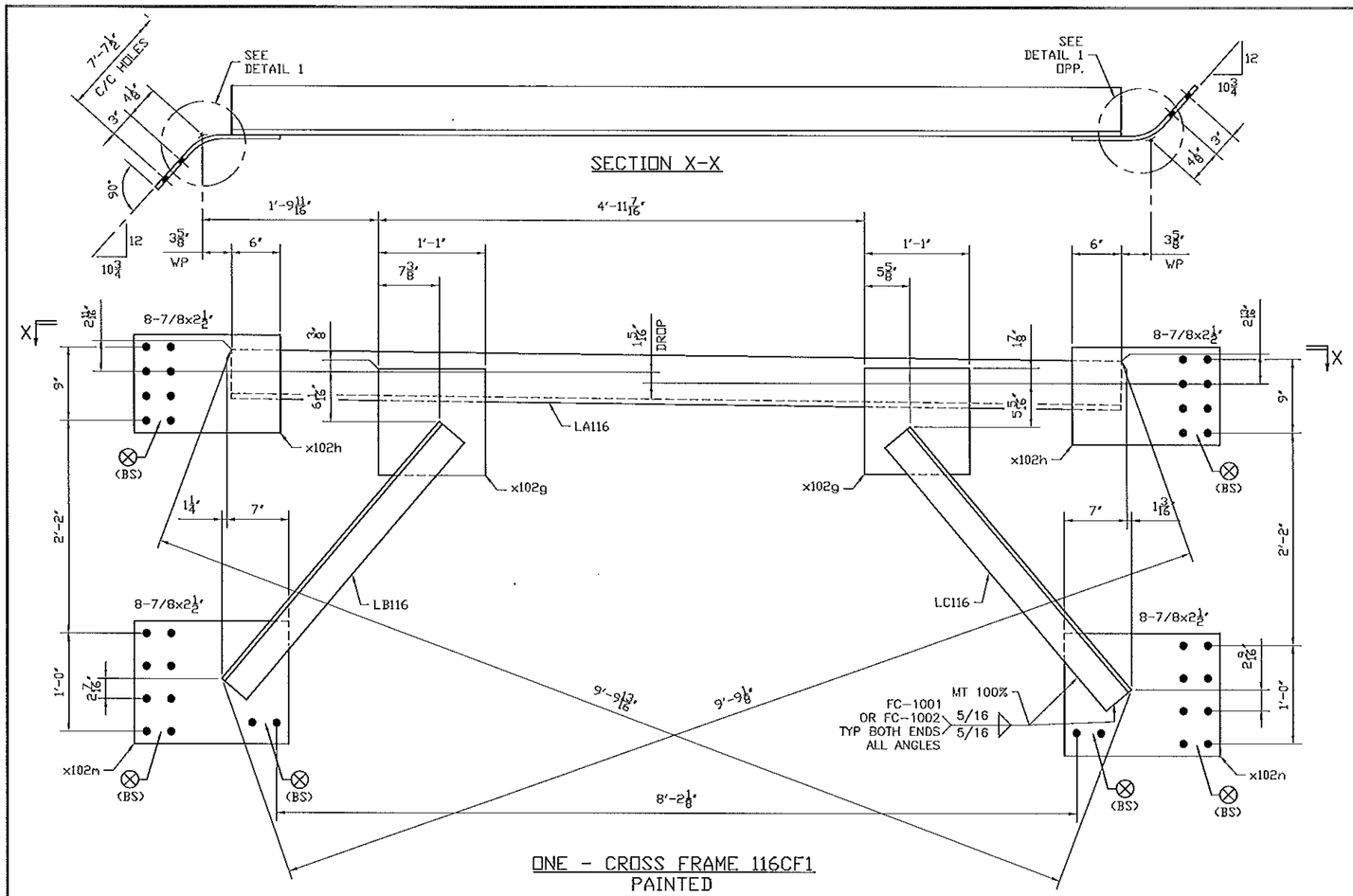

ONE - CROSS FRAME 116CF1
PAINTED

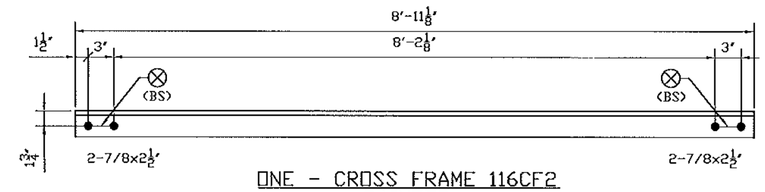

ONE - CROSS FRAME 116CF2
PAINTED

GENERAL NOTES: SEE GN100

HOLES: 15/16 (U.N.)

CLEANING AND PAINTING: SEE SHEET P100 AND P101

No	REVISION	DATE	PAR	VER.
A	FOR APPROVAL	07/06/12	BR	EG

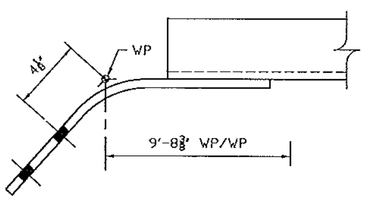

DETAIL 1

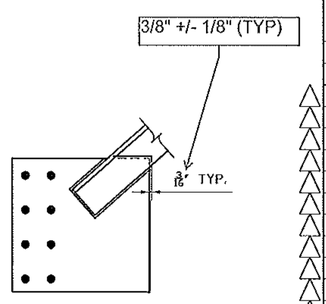

WELD TERMINATION DETAIL

BILL OF MATERIAL

Mark	Qty.	Description	SU Grd	Length	Remark	ABM	Total Weight	Seq	Qty /Seq
116CF1	ONE	CROSS FRAME				497	523	1	1
116CF1	1	CROSS FRAME		10-7 7/8	PAINT				
LA116	1	L6x6x5/8	A709 50W	9-1 1/8		103-1	220		
LB116	1	L4x4x1/2	A709 50W	3-5 1/4		103-3	44		
LC116	1	L4x4x1/2	A709 50W	3-8 1/16		103-3	45		
x102g	2	PL1/2x13	A709 50W	1-1		103-5	48		
x102h	2	PL1/2x12	A709 50W	1-5 3/4	BENT	103-4	60		
x102m	1	PL1/2x15	A709 50W	1-6 3/4	BENT	103-4	40		
x102n	1	PL1/2x15	A709 50W	1-6 3/4	BENT	103-4	40		
FB		FIELD_BOLTS							
78F212	32	.7/8 Dia A325 TYP3		2 1/2	1FL WASH		5		
116CF2	1	CROSS FRAME				84	87	1	1
116CF2	1	L3x3x1/2	A709 50W	8-11 1/8	PAINT	103-2	84		
FB		FIELD_BOLTS							
78F212	4	.7/8 Dia A325 TYP3		2 1/2	1FL WASH		5		

See standard specification 506.24(a)(9), no payment will be made for bolts, nuts, washers, they are considered to be incidental

Vermont Agency of Transportation
RECEIVED
CK'D BY M.E.M OK'D BY C.W.M.
July 09, 2012
RESUBMIT APPROVED AS NOTED
BY C. CARLSON DATE 07-27-2012

NOTE: BOLT 1 WASHER: 1 WASHER UNDER NUT U.N.
BOLT 2 WASHER: 1 WASHER UNDER HEAD U.N.
1 WASHER UNDER HEAD U.N.

STRUCTAL Bridges
386 River Road, Clarenont, NH 03743
Tel(603) 542-5202 Fax(603) 542-5312
a division of CANAM BRIDGES Inc.

PROJECT: VT RT 9, BRIDGE NO. 11
TOWN OF WOODFORD, VT
OVER WALOOMSAC RIVER

TITLE: ABUTMENT CROSS FRAME

REFERENCE: PROJECT NO. ER BHF 010-1 (44)

DRAWN BY	DATE	CONTRACT NO	DRAWING NO
BR	JULY 2012	UN04260	116 A
CHECKED BY GG	JULY 2012		