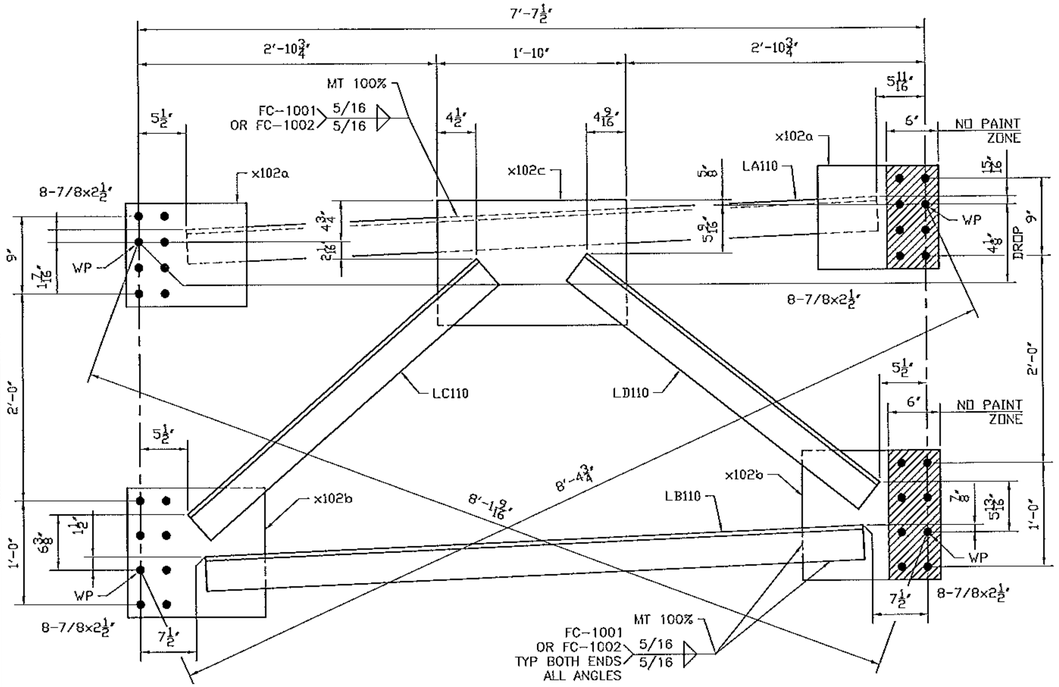

ONE - CROSS FRAME 110CF1
PAINTED

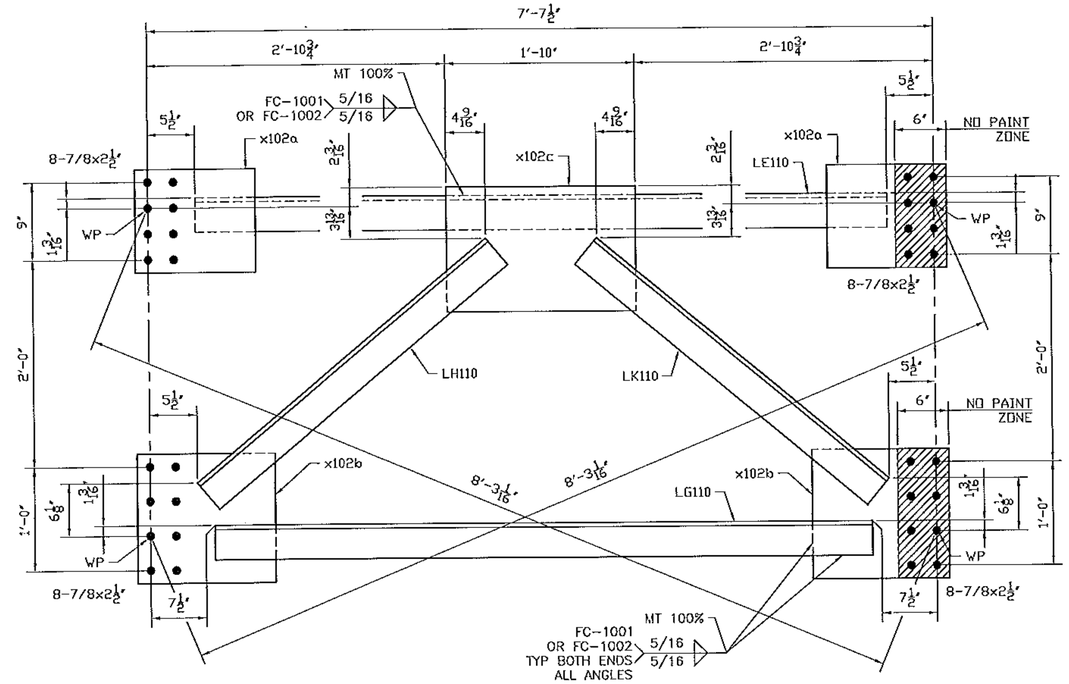

ONE - CROSS FRAME 110CF2
PAINTED

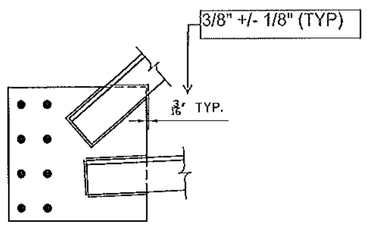

WELD TERMINATION DETAIL

BILL OF MATERIAL

Mark	Qty.	Description	Stl Grd	Length	Remark	ABM	Total Weight	Seq	Qty /Seq
110CF1	ONE	CROSS FRAME				423	449		1
110CF1	1	.CROSS FRAME		7-10 1/2	PAINT				
LA110	1	L4x4x1/2	A70950W	6-8 3/8		105-1	86		
LB110	1	L4x4x1/2	A70950W	6-4 9/16		105-5	82		
LC110	1	L4x4x1/2	A70950W	3-8 7/8		105-5	48		
LD110	1	L4x4x1/2	A70950W	3-7		105-7	46		
x102a	2	PL1/2x12	A70950W	1-2		105-7	48		
x102b	2	PL1/2x15	A70950W	1-4		105-7	68		
x102c	1	PL1/2x14 1/2	A70950W	1-10		105-9	45		
FB		FIELD_BOLTS							
78F212	32	.7/8 Dia A325 TYP3		2 1/2	1FL WASH		~~36~~		
110CF2	ONE	CROSS FRAME				423	449		1
110CF2	1	.CROSS FRAME		7-10 1/2	PAINT				
LE110	1	L4x4x1/2	A70950W	6-8 1/2		105-1	86		
LG110	1	L4x4x1/2	A70950W	6-4 1/2		105-5	82		
LH110	1	L4x4x1/2	A70950W	3-7 15/16		105-5	47		
LK110	1	L4x4x1/2	A70950W	3-7 15/16		105-7	47		
x102a	2	PL1/2x12	A70950W	1-2		105-7	48		
x102b	2	PL1/2x15	A70950W	1-4		105-7	68		
x102c	1	PL1/2x14 1/2	A70950W	1-10		105-9	45		
FB		FIELD_BOLTS							
78F212	32	.7/8 Dia A325 TYP3		2 1/2	1FL WASH		~~36~~		

GENERAL NOTES: SEE GN100

HOLES: 15/16 (U.N.)

CLEANING AND PAINTING: SEE SHEET P100 AND P101

See standard specification 506.24(a)(9), no payment will be made for bolts, nuts, washers, they are considered to be incidental

Vermont Agency of Transportation
RECEIVED
CK'D BY M.E.M OK'D BY C.W.M.
July 09, 2012
RESUBMIT APPROVED AS NOTED
BY C. CARLSON DATE 07-27-2012

No	REVISION	DATE	PAR	VER.
A	FOR APPROVAL	07/06/12	BR	EG

NOTE: BOLT 1 WASHER: 1 WASHER UNDER NUT U.N.
BOLT 2 WASHER: 1 WASHER UNDER HEAD U.N.
1 WASHER UNDER HEAD U.N.

STRUCTAL Bridges
386 River Road, Claremont, NH 03743
Tel:(603) 542-5202 Fax:(603) 542-5312
a division of CANAM BRIDGES INC.

PROJECT: VT RT 9, BRIDGE NO. 11
TOWN OF WOODFORD, VT
OVER WALOOMSAC RIVER

TITLE: CROSS FRAME

REFERENCE: PROJECT NO. ER BHF 010-1 (44)

DRAWN BY	DATE	CONTRACT NO
BR	JULY 2012	UN04260
CHECKED BY	DATE	DRAWING NO
GG	JULY 2012	110 A