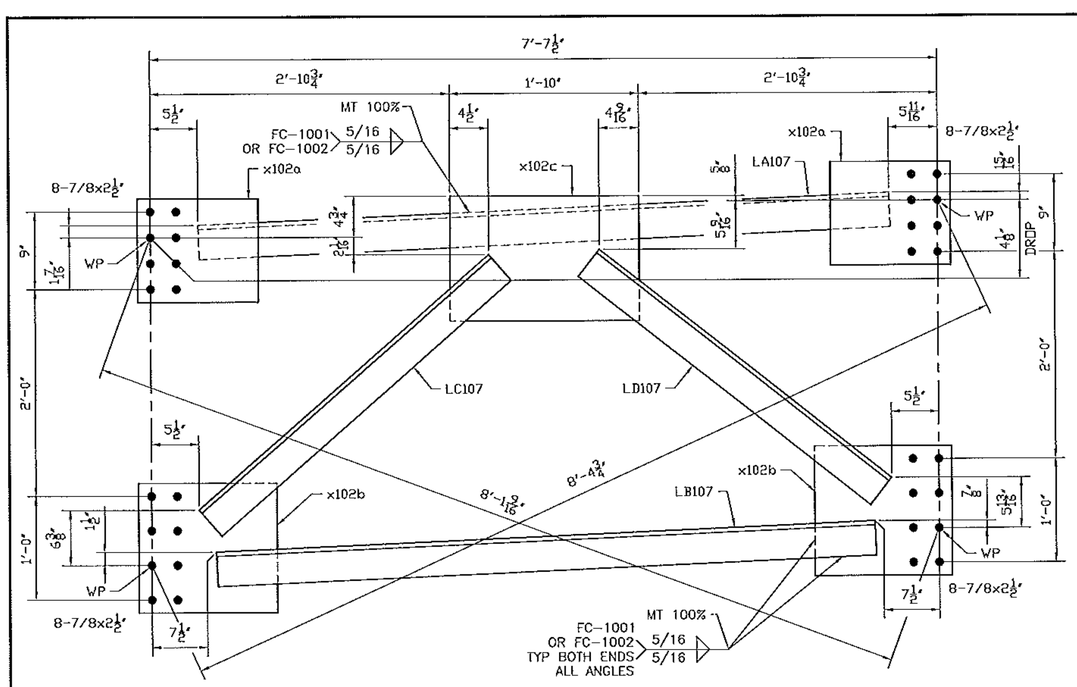

4 - CROSS FRAME 107CF1

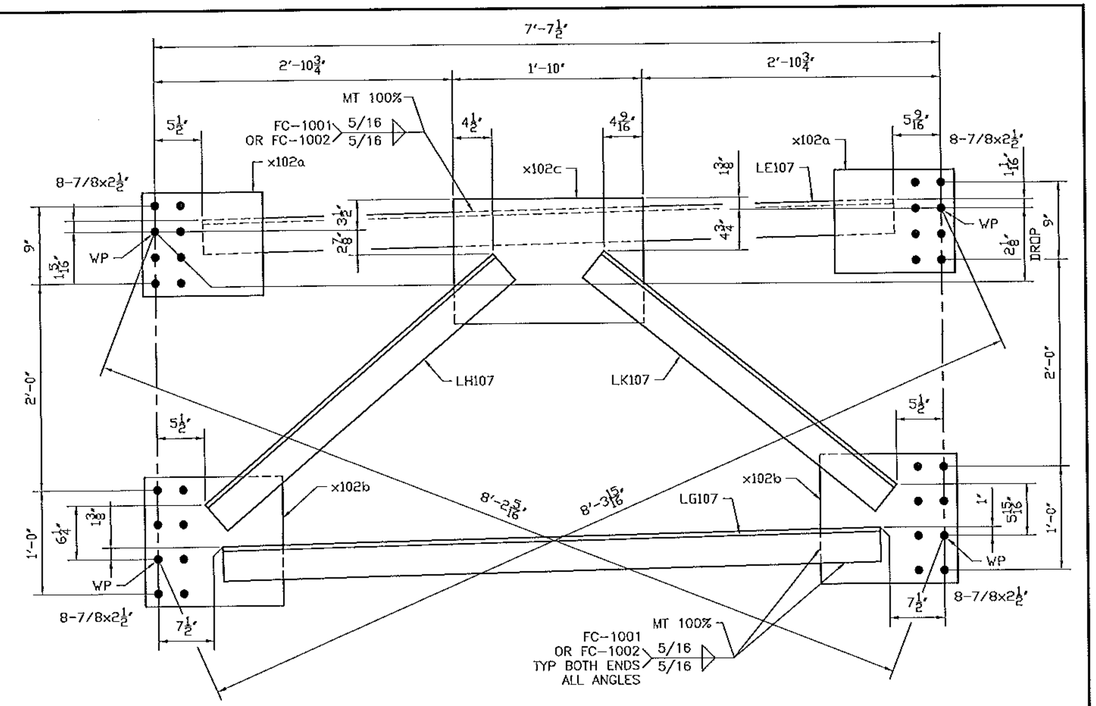

4 - CROSS FRAME 107CF2

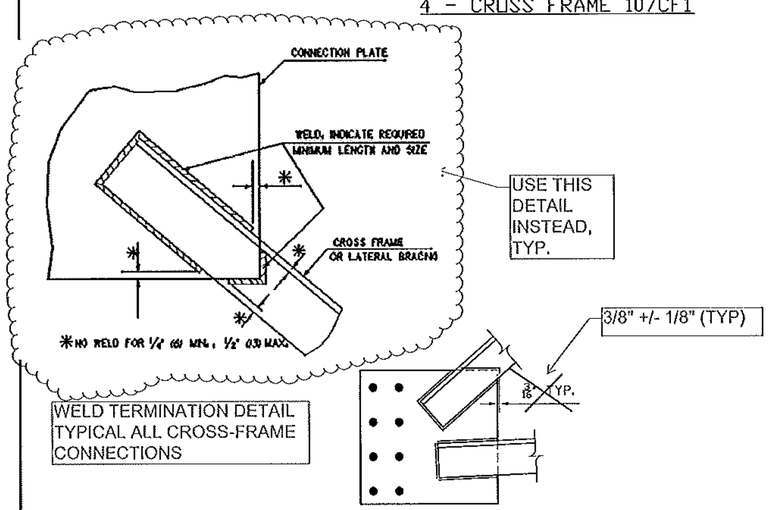

WELD TERMINATION DETAIL

BILL OF MATERIAL

Mark	Qty.	Description	Stl Grd	Length	Remark	ABM	Total Weight	Seq	Qty /Seq
107CF1	4	CROSS FRAME				1688	1790		4
107CF1	4	.CROSS FRAME		7-10 1/2					
LA107	4	L4x4x1/2	A70950W	6-8 3/8		106-2	343		
LB107	4	L4x4x1/2	A70950W	6-4 9/16		106-2	327		
LC107	4	L4x4x1/2	A70950W	3-8 7/8		106-4	191		
LD107	4	L4x4x1/2	A70950W	3-7		106-4	183		
x102a	8	PL1/2x12	A70950W	1-2		106-6	191		
x102b	8	PL1/2x15	A70950W	1-4		106-6	272		
x102c	4	PL1/2x14 1/2	A70950W	1-10		106-8	181		
FB		FIELD_BOLTS							
78F212	128	.7/8 Dia A325 TYP3		2 1/2	1FL WASH		~~192~~		
107CF2	4	CROSS FRAME				1688	1790		4
107CF2	4	.CROSS FRAME		7-10 1/2					
LE107	4	L4x4x1/2	A70950W	6-8 7/16		106-2	343		
LG107	4	L4x4x1/2	A70950W	6-4 1/2		106-2	326		
LH107	4	L4x4x1/2	A70950W	3-8 7/16		106-4	190		
LK107	4	L4x4x1/2	A70950W	3-7 7/16		106-4	185		
x102a	8	PL1/2x12	A70950W	1-2		106-6	191		
x102b	8	PL1/2x15	A70950W	1-4		106-6	272		
x102c	4	PL1/2x14 1/2	A70950W	1-10		106-8	181		
FB		FIELD_BOLTS							
78F212	128	.7/8 Dia A325 TYP3		2 1/2	1FL WASH		~~192~~		

GENERAL NOTES: SEE GN100

HOLES: 15/16 (U.N.)

CLEANING AND PAINTING: SEE SHEET P100

See standard specification 506.24(a)(9), no payment will be made for bolts, nuts, washers, they are considered to be incidental

Vermont Agency of Transportation
RECEIVED
CK'D BY M.E.M OK'D BY C.W.M.
July 09, 2012
RESUBMIT APPROVED AS NOTED
BY C. CARLSON DATE 07-27-2012

No	REVISION	DATE	PAR	VER.
A	FOR APPROVAL	07/06/12	BR	EG

NOTE: BOLT 1 WASHER: 1 WASHER UNDER NUT U.N.
BOLT 2 WASHER: 1 WASHER UNDER HEAD U.N.
1 WASHER UNDER HEAD U.N.

STRUCTAL Bridges
386 River Road, Claremont, NH 03743
Tel:(603) 542-5202 Fax:(603) 542-5312
a division of CANAM STEEL Inc.

PROJECT: VT RT 9, BRIDGE NO. 11
TOWN OF WOODFORD, VT
OVER WALOOMSAC RIVER

TITLE: CROSS FRAME

REFERENCE: PROJECT NO. ER BHF 010-1 (44)

DRAWN BY	DATE	CONTRACT NO
BR	JULY 2012	UN04260
CHECKED BY GG	JULY 2012	DRAWING NO 107 A