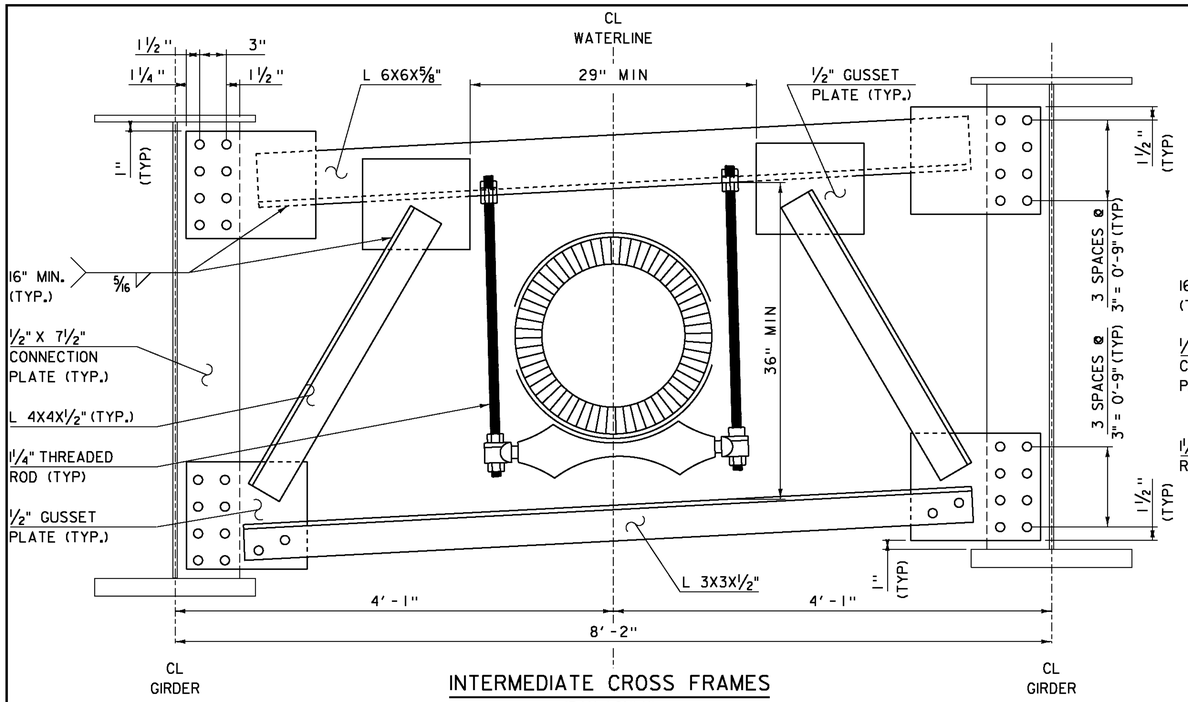

INTERMEDIATE CROSS FRAMES

(BAY 1 ONLY)
SCALE 1 1/2" = 1'-0"

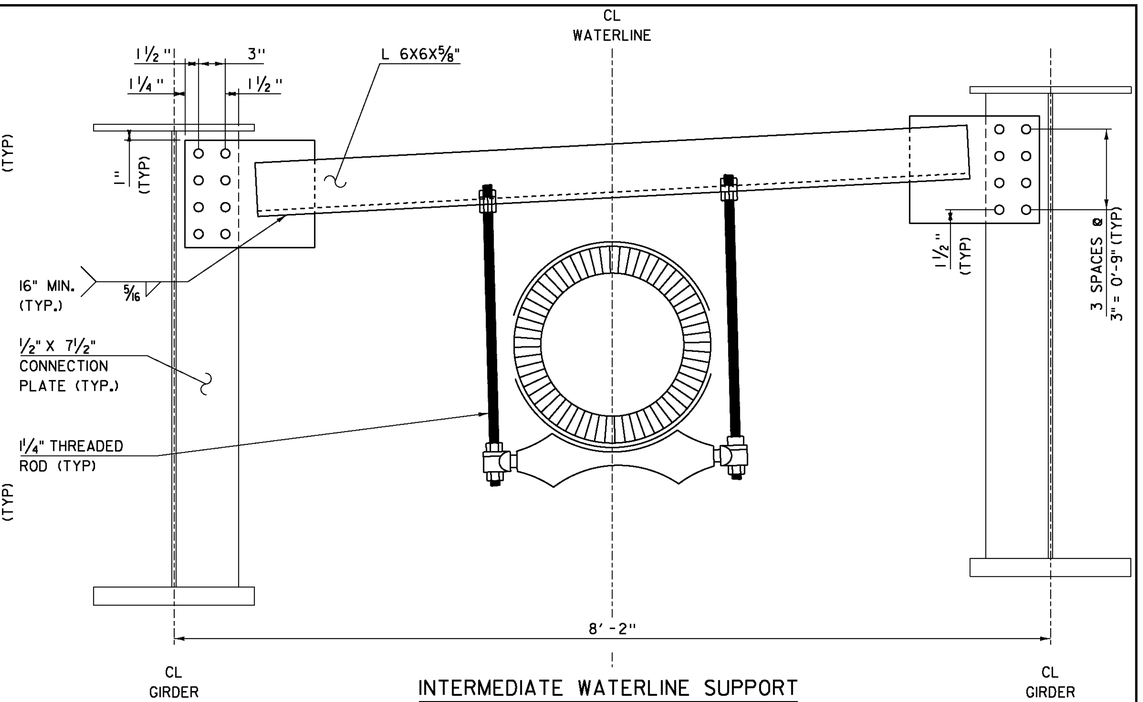

INTERMEDIATE WATERLINE SUPPORT

(BAY 1 ONLY)
SCALE 1 1/2" = 1'-0"

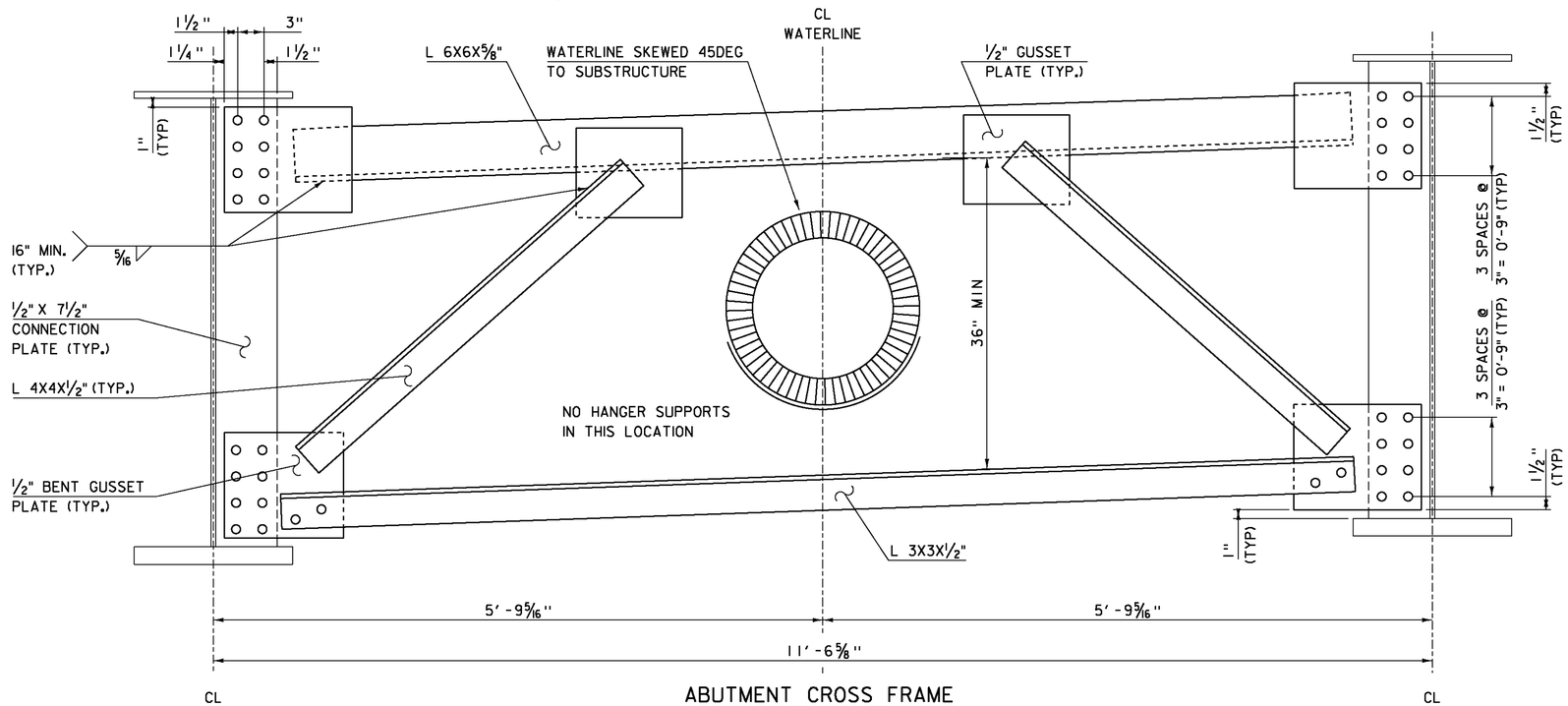

ABUTMENT CROSS FRAME

(BAY 1 ONLY)
SCALE 1 1/2" = 1'-0"

PROJECT NAME: WOODFORD	
PROJECT NUMBER: ER BHF 010-1(44)	
FILE NAME: sllb214sup.dgn	PLOT DATE: 23-MAR-2012
PROJECT LEADER: C. CARLSON	DRAWN BY: C. MOONEY
DESIGNED BY: M. EVANS-MONGEON	CHECKED BY: M. EVANS-MONGEON
BAY ONE CROSSFRAME DETAILS	SHEET 24 OF 58