FDM INFO		SHIP	BILL OF MATERIAL						JOB NO.	DRAWING NO.	REV.
									529-1	4	
PAGE	LINE	MARK	QTY	MARK	MATERIAL	LENGTH FT	LENGTH INCHES	REMARKS	WT	PROCUREMENT NOTES	
		4G4A	1		GIRDER				22954		
1	J		1	wa	PL $\frac{5}{8}$x48	85	$5\frac{5}{8}$	M270-50WT2	8725		
1	G		1	ta	PL $1\frac{1}{4}$x16	85	$5\frac{7}{8}$	M270-50WT2	5817		
1	E		1	ba	PL $1\frac{3}{4}$x16	85	$4\frac{3}{16}$	M270-50WT2	8132		
2	L		2	x1k	PL $\frac{7}{8}$x$7\frac{1}{2}$	4	0		85		
2	M		2	x1n	PL $\frac{1}{2}$x5	4	0		34		
2	M		1	x1p	PL $\frac{1}{2}$x5	4	0		34		

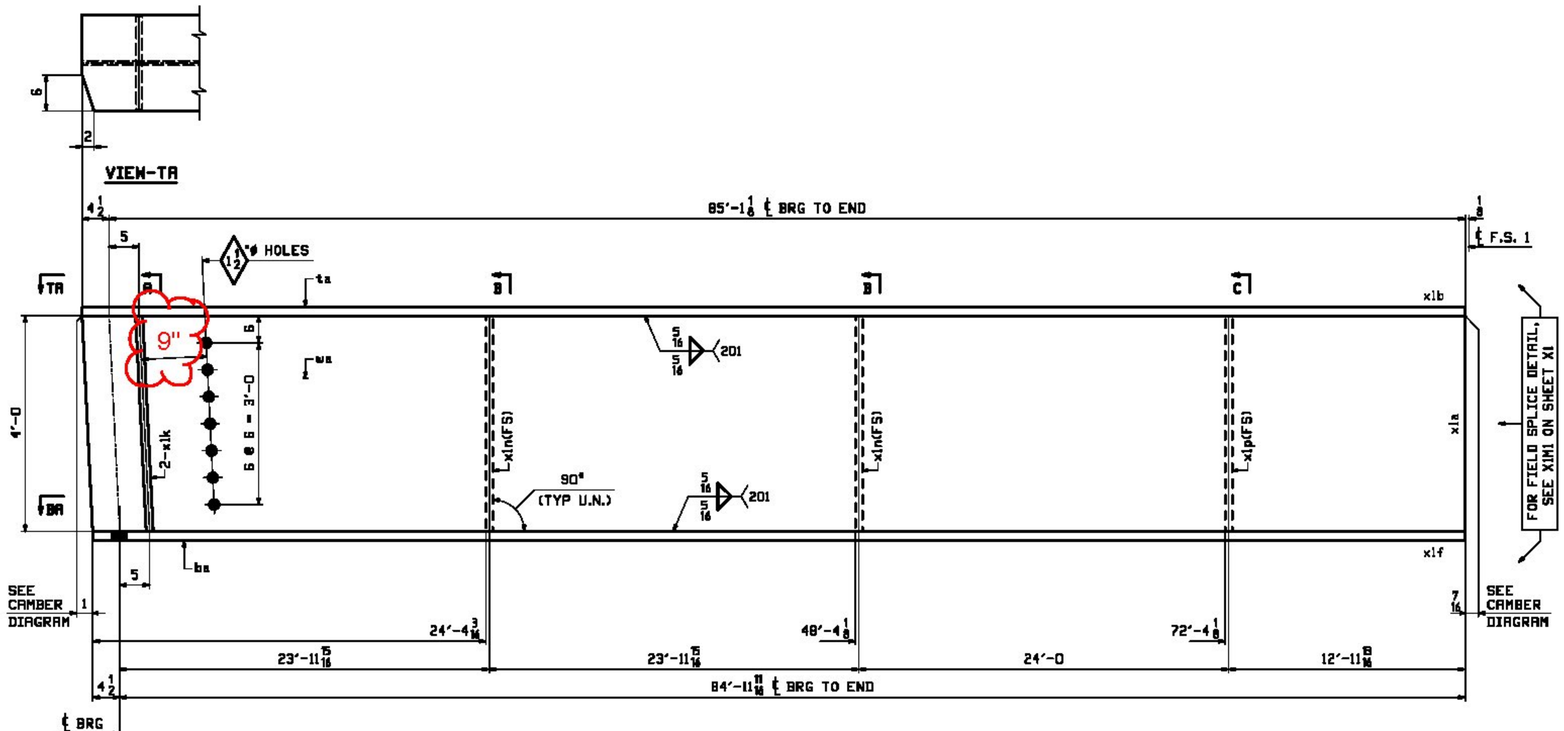

ONE ~ GIRDER ~ 4G4A

NOTES:
1. FOR GENERAL NOTES SEE SHEET GN1.
2. FOR FIELD SPLICE DETAILS SEE SHEET X1.
3. FOR GIRDER STANDARD DETAILS SEE SHEET X1.
4. FOR CAMBER & FLANGE DIAGRAM SEE SHEET C1.
5. T2 - DENOTES CHARPY V-NOTCH TESTING REQUIRED.

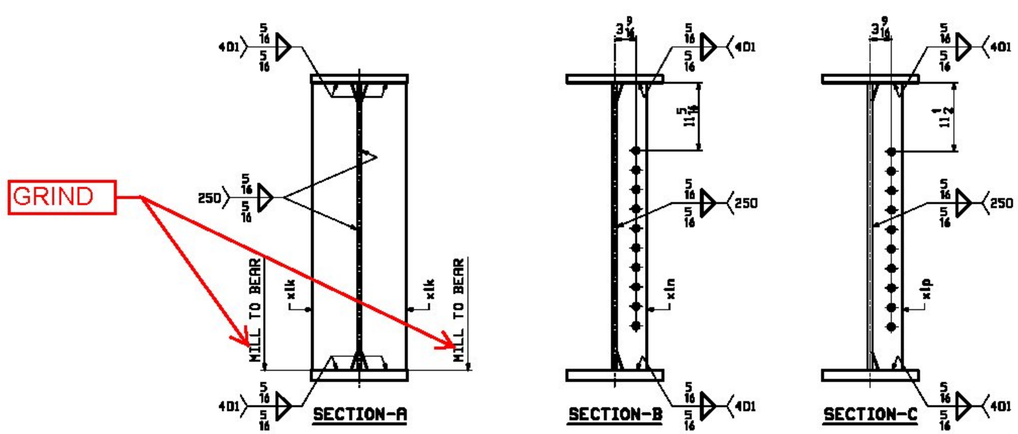

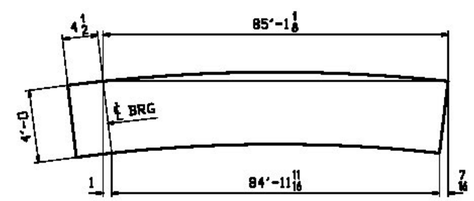

ORIENTATION DIAGRAM

REV.	DATE	REMARKS	DWN	CHK	APVL	SHOP
0						

MATERIAL:	SURFACE PREP. & PAINT:	HOLES:	SHOP BOLTS:
M270-50W	SEE GN1	15/16"ø U.N.	NONE

DESCRIPTION: GIRDER ~ 4G4A

CASCO BAY STEEL STRUCTURES, INC.
1 WALLACE AVE. PHONE (207) 780-6722
SOUTH PORTLAND, ME 04106 FAX. (207) 780-6726

STRUCTURE: VT 100 OVER WARDSBORO BROOK BRIDGE NO 78 WINDHAM COUNTY	DRAWN: EEO	DATE: 02/01	
	CHKD: DBH	DATE: 02/27	
LOCATION: TOWN OF JAMAICA, VT	JOB NO.	DWG NO.	
PROJ NO. ER-BRF 013-1(16)	529-1	4	
CUSTOMER: T. BUCK CONSTRUCTION		REV.	

Vermont Agency of Transportation
RECEIVED
CK'D BY GML/JWC OK'D BY GG
March 6, 2013
RESUBMIT NO Approved AsNoted
BY KMH DATE 04/02/13