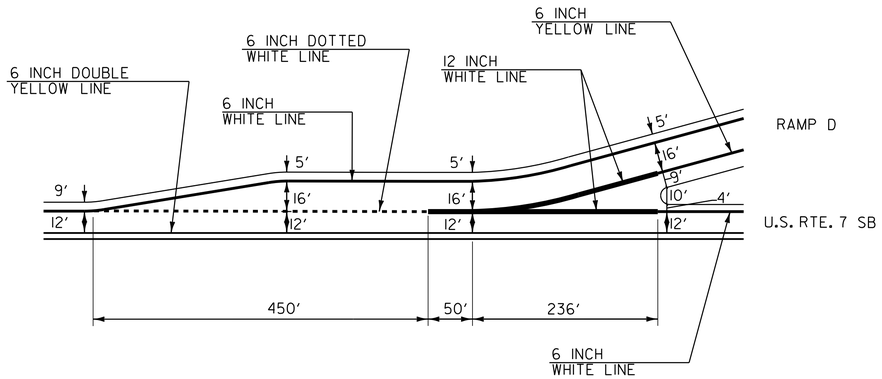

ARLINGTON INTERCHANGE EXIT NO. 3

RAMP D-PARALLEL ACCELERATION LANE (SB ON RAMP)
SEE SHEET 48

NOT TO SCALE

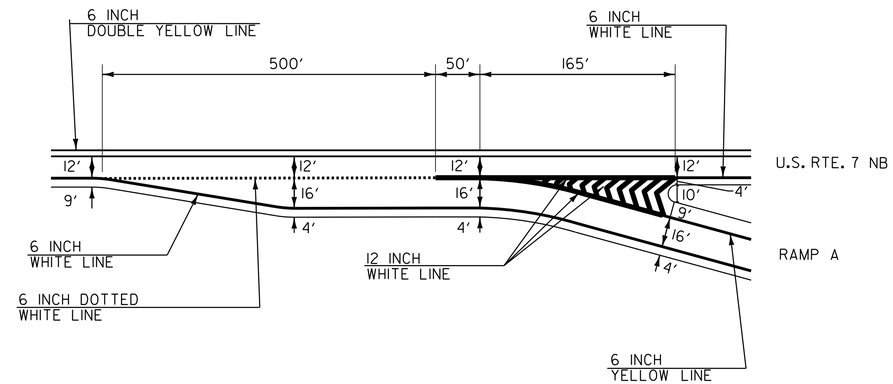

ARLINGTON INTERCHANGE EXIT NO. 3

RAMP A-PARALLEL DECELERATION LANE (NB OFF RAMP)
SEE SHEET 48

NOT TO SCALE

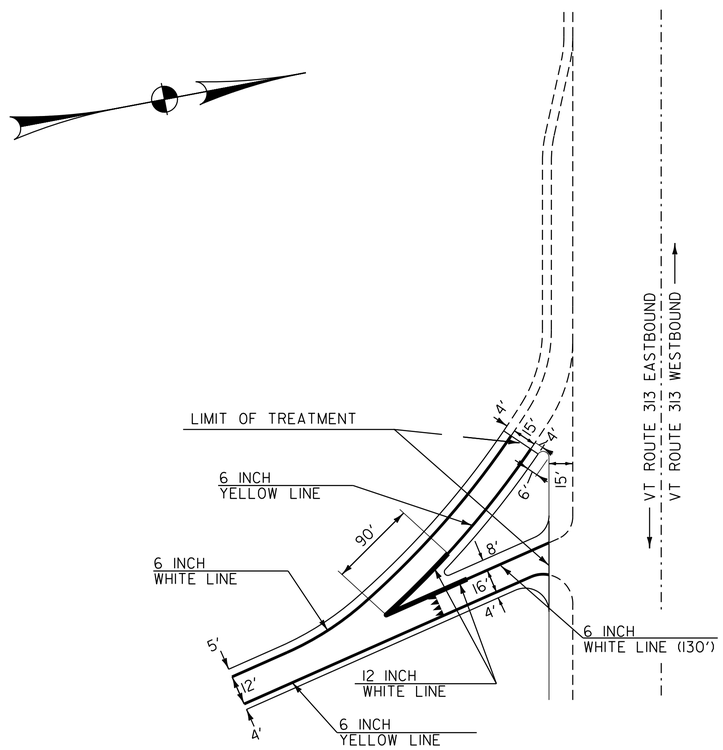

ARLINGTON INTERCHANGE EXIT NO. 3

RAMP D-SB ON RAMP
SEE SHEET 48

NOT TO SCALE

INTERCHANGE GORE DETAIL #1	PROJECT NAME: BENNINGTON-MANCHESTER	
	PROJECT NUMBER: NH SURF(29)	
	FILE NAME: 11b026.dgn	PLOT DATE: 22-AUG-2013 14:35
	PROJECT LEADER: M. FOWLER	DRAWN BY: JLR
	DESIGNED BY: JLR	CHECKED BY: PVT. MGT.
	11b026-50.i	SHEET 50 OF 63