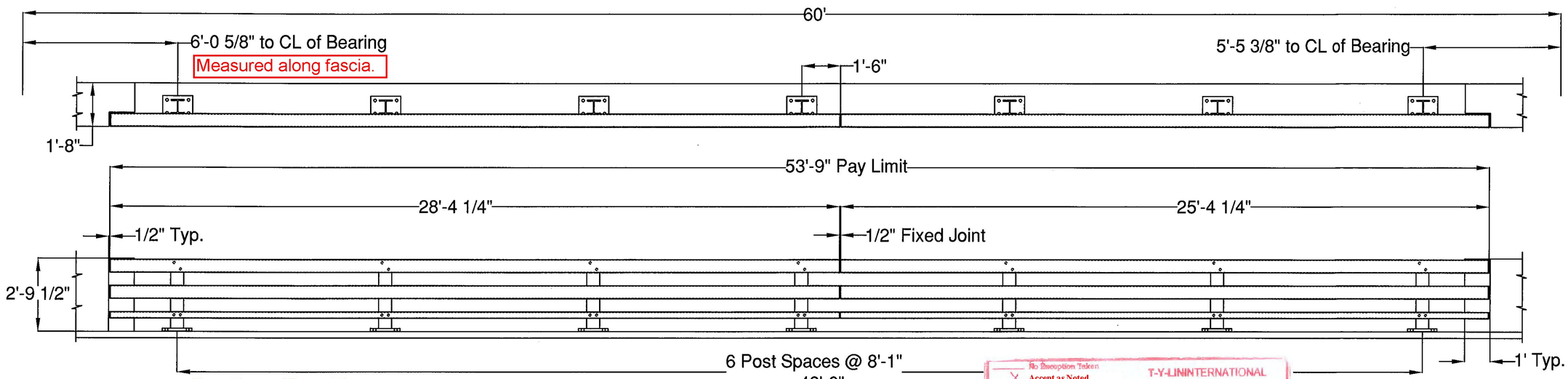

NORTH RAILING FACING NORTH
(SOUTH RAILING SIMILAR)

Vermont Agency of Transportation
RECEIVED
ON: May 7, 2013
and Checked for
CONFORMANCE
BY: Rob Young DATE: 06/07/2013

T-Y-LIN INTERNATIONAL
No Exception Taken
X Accept as Noted
Submit Specified Item
Revise and Resubmit as Noted
Rejected
Checking is for general compliance with the design concept of the project and general compliance with the information given in the contract documents only. Any action shown is not an approval and is subject to the requirements of the plans and specifications. Any action shown on a specific item shall not indicate the checking of an assembly of which the item is a component. Contractor is solely responsible for: dimensions which shall be confirmed and correlated at the job site, fabrication processes, techniques of construction, safety precautions; and coordination of its work with that of all other trades and the satisfactory performance of its work.
Reviewed By: Date: 06-03-2013

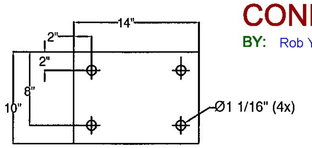

1/8" FABRIC PAD

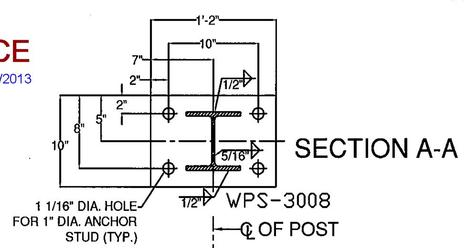

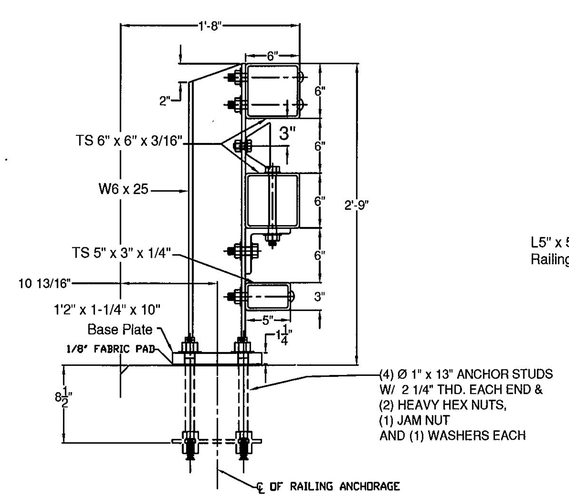

SECTION

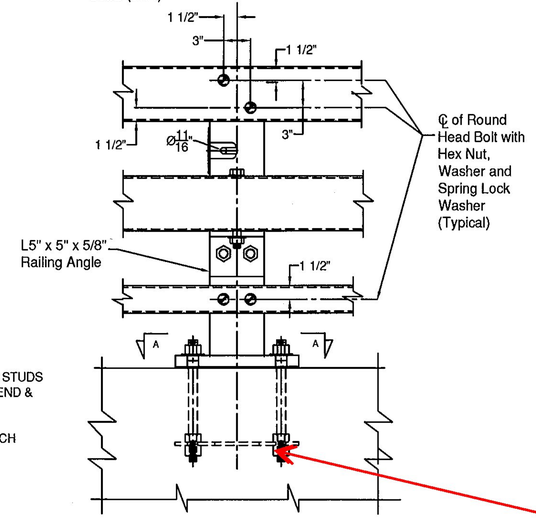

ELEVATION

STEEL BRIDGE RAILING

A436 (typ.)

QTY		ASTM DESIGNATION
14	THREE RAIL POST @ 2'-9" OA	A572 Gr. 50
2	3" X 5" X 1/4" RAIL @ 28'4-1/4" w/Capped End	A500 Gr. B
2	3" X 5" X 1/4" RAIL @ 25'4-1/4" w/Capped End	A500 Gr. B
4	6" X 6" X 3/16" RAIL @ 28'4-1/4" w/Capped End	A500 Gr. B
4	6" X 6" X 3/16" RAIL @ 25'4-1/4" w/Capped End	A500 Gr. B
2	2-1/8" X 4-1/4" FIX. SPLICE BAR @ 2'-3"	A572 Gr. 50
4	5" X 5" X 5/16" FIX. SPLICE TUBE @ 2'-3"	A500 Gr. B, A572 Gr. 50
~~14~~	~~3/8" X 10" X 14" ANCHOR PLATES~~	~~A572 Gr. 50~~
14	1/8" X 10" X 14" FABRIC PAD	AASHTO M251
~~56~~	~~Ø 1" X 13" ANCHOR STUDS, W/ 2 1/4" THD. EACH END~~	~~A449 Gr. 1~~
56 ~~112~~	Ø 1" HEAVY HEX NUTS & FLAT WASHERS	A563 (HD) & ~~F436~~
~~56~~	~~Ø 1" HEX JAM NUTS~~	~~A563~~
56	Ø 7/8" X 8" ROUND HEAD BOLT, NUT, SQ. WASHER, L.W.	A449, A563 (HD), ASME B18.21.1
14	Ø 3/4" X 8" HEX BOLT, NUT, (2) F.W., & L.W.	A325, A563 (HD), F436, & ASME B18.21.1
28	Ø 3/4" X 2-3/4" HEX BOLT, NUT, (2) F.W., & L.W.	A325, A563 (HD), F436, & ASME B18.21.1
16	Ø 3/4" X 7-1/2" HEX BOLT, NUT, & (2) F.W.	A325, A563 (HD), & F436
8	Ø 3/4" X 4-1/2" HEX BOLT, NUT, & (2) F.W.	A325, A563 (HD), & F436
14	L5" X 5" X 5/8" RAILING ANGLE @ 6 1/8"	A572 Gr. 50
0	DELINEATORS	(SUPPLIED BY CUSTOMER)
14	1 1/4" X 10" X 14" POST BASE PLATE	A572 GR 50

NEXT Beam fabricator may be using anchor bolts and not anchor rods due to clear cover restrictions.

Post Base Plate Not Listed

ITEM #: 525.335 GEN CONTR: F.R. LAFAYETTE, P.O. 27767

SHEET 1 OF 2

APPROVED BY:

BRIDGE RAIL DETAILS SHEET

PROJECT: PLYMOUTH ER BRS 0149 (5) VT 100A (MAJOR COLLECTOR) BRIDGE NO. 8
TOWN OF PLYMOUTH, WINDSOR COUNTY, VERMONT

R	NO.	DATE	DESCRIPTION	BY	R	NO.	DATE	DESCRIPTION	BY
E				E.P.	E				E.P.
V				E.P.	V				

ELDERLEE, INC.
OAKS CORNERS, NEW YORK 14518
E-Mail: dlong@elderlee.com
Tel: 315-789-6670 Fax: 315-789-6615

AISC CERTIFIED FABRICATOR

DRAWN	D.L.	12/13/12
CHECKED	E.P.	12/13/12
APPROVED	.	.
SCALE	SCHEMATIC	
DRAWING NO.	F.R.L. PLYMOUTH 27767	