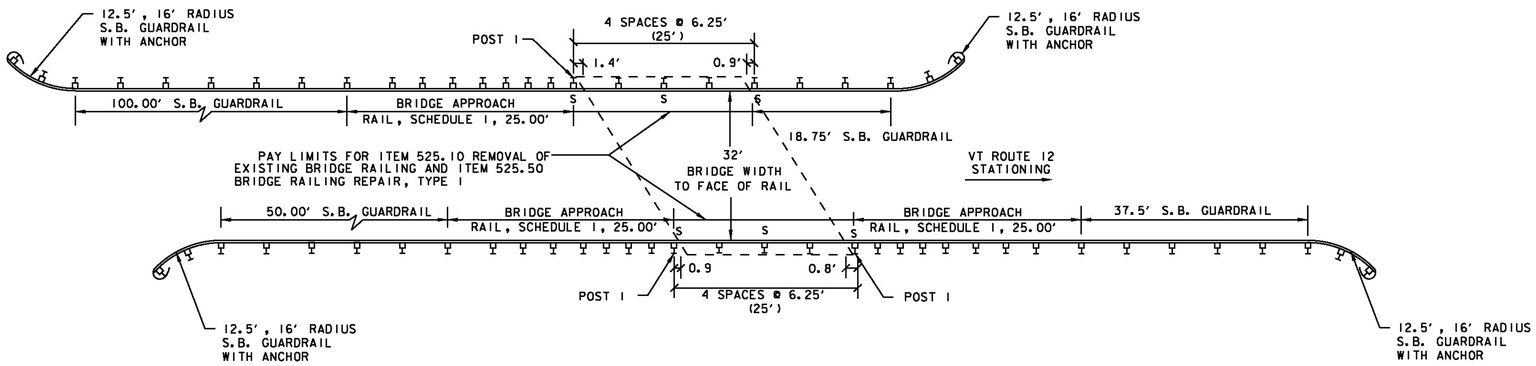

ELMORE BRIDGE #95
STA. 359+29 - MM 6.805

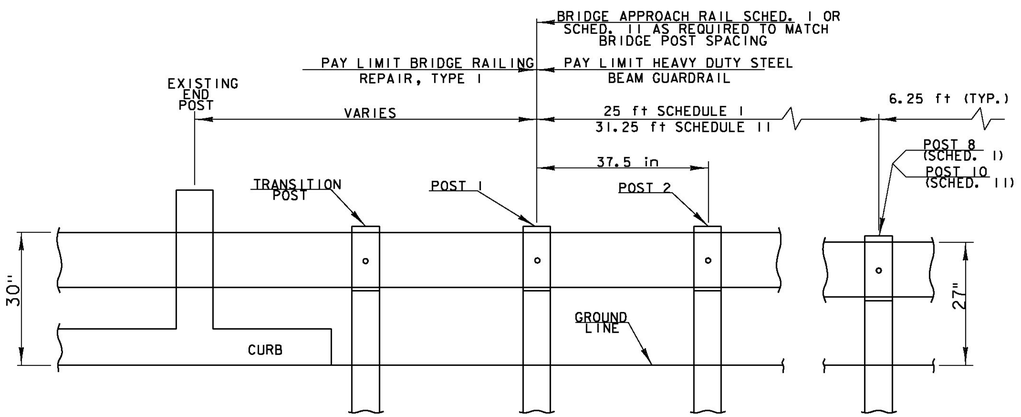

BRIDGE APPROACH RAILING

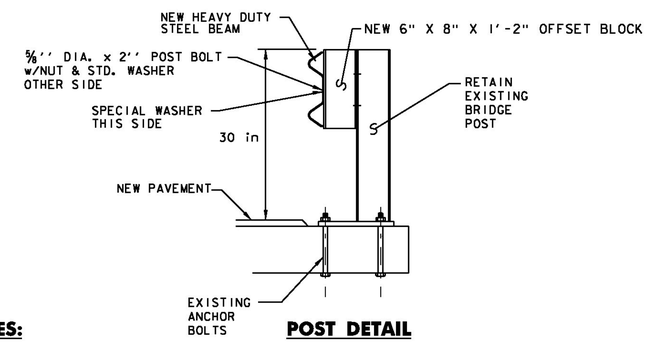

POST DETAIL

BRIDGE APPROACH RAILING

WHEN A RAIL PANEL SPLICE OCCURS AT POST NO. 1 USE SCHEDULE I FOR APPROACH RAILING. WHEN A RAIL PANEL SPLICE OCCURS AT BRIDGE END POST USE SCHEDULE II FOR APPROACH RAILING.

SCHEDULE I		
POST NO.	SPACING	PAYMENT FACTOR
1	3'-1½''	1.4 x 12.5 ft
2	3'-1½''	
3	3'-1½''	
4	3'-1½''	
5	4'-2''	1.2 x 12.5 ft
6	4'-2''	
7	4'-2''	
8		
9	6'-3'' (TYP.)	1.0 (TYP.)

SCHEDULE II		
POST NO.	SPACING	PAYMENT FACTOR
1	3'-1½''	1.4 X 18.75 ft
2	3'-1½''	
3	3'-1½''	
4	3'-1½''	
5	3'-1½''	
6	3'-1½''	
7	4'-2''	1.2 x 12.5 ft
8	4'-2''	
9	4'-2''	
10		
11	6'-3'' (TYP.)	1.0 (TYP.)

NOTES:

1. BRIDGE RAIL SHALL BE HEAVY DUTY STEEL BEAM RAIL, ITEM 525.50 "BRIDGE RAILING REPAIR, TYPE I".
2. BRIDGE APPROACH RAIL HEIGHT SHALL BE TRANSITIONED TO NORMAL ROADWAY RAIL HEIGHT IN 25 FEET.
3. APPROACH RAILING SHALL BE HEAVY DUTY STEEL BEAM FOR LENGTHS OF 25 FEET OR 31.25 FEET DETERMINED BY THE SCHEDULE. SEE BRIDGE DETAILS.
4. FOR BRIDGE RAILING, THE TRANSITION POST SHALL HAVE AN OFFSET BLOCK AND BE LOCATED AS CLOSE AS PRACTICAL TO THE MID-POINT BETWEEN THE BRIDGE END POST AND APPROACH RAIL POST 1.
5. SPLICES SHALL LAP IN DIRECTION OF TRAFFIC FLOW.

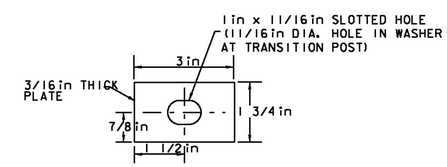

SPECIAL WASHER DETAIL

(MATERIAL SHALL MEET AASHTO M270M/M270 GRADE 345)

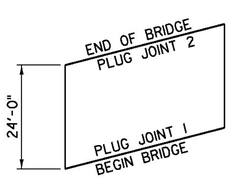

JOINT	STATION	LENGTH
1	359+15	40' - 0"
2	359+39	40' - 0"
	BRIDGE #95	80' - 0"

TOTAL LENGTH OF JOINT

ELMORE BRIDGE #95
STA. 359+29 (MM 6.805)
COLD PLANE AND PAVE

BRIDGE #	516.10 BRIDGE EXPANSION JOINT, ASPHALTIC PLUG	580.20 RAPID SETTING CONCRETE REPAIR MATERIAL WITH COARSE AGGREGATE
	LF	CF
ELMORE #95	80	100
SUBTOTAL	80	100
ROUNDING	-	-
TOTAL	80	100

NOTE: REFER TO BRIDGE JOINT ASPHALTIC PLUG - STRUCTURES DETAIL SD-516.10

NOT TO SCALE

BRIDGE DETAIL SHEET

PROJECT NAME: ELMORE-MORRISTOWN
PROJECT NUMBER: STP 2937 (1)

FILE NAME: z11c310.dgn
PROJECT LEADER: C. LATHROP
DESIGNED BY: S. LAMPHERE
PLOT FILE: z11c310_11.i
PLOT DATE: 3/3/14
DRAWN BY: J. GOODALL
CHECKED BY: C. LATHROP
SHEET 11 OF 194